Chhattisgarh State Renewable Energy Development Agency (CREDA)

(Dept. of Energy, Govt. of Chhattisgarh)
Near Energy Education Park, Village Fundhar
VIP (Air Port Road) Raipur 492015 (C.G.)
Phone (No.) : +919406210918
E-mail: credatendercell@gmail.com, Website: creda.co.in

E-BID DOCUMENT No. 202960/CREDA/MSV-JC/SS/2026-27 Dated: 28.10.2026

REQUEST FOR PROPOSAL (RFP) FOR DESIGN, SUPPLY, INSTALLATION AND COMMISSIONING OF GRID-CONNECTED ROOFTOP SOLAR PHOTOVOLTAIC POWER PLANT (Cumulative Cap. 143kWp/15Nos.) AND SPV Drinking Water Pump (Cap. minimum 900Wp / 1.0 HP DC Submersible with 06 Meters staging and 5000 Liters Storage Tank*01 Nos.) WITH 5 YEARS ONSITE WARRANTEE AND COMPREHENSIVE MAINTENANCE OF DIFFERENT CAPACITIES INCLUDING TRAINING AT VILLAGE-KHOKHRA DISTRICT JANJGIR-CHAMPA OF CHHATTISGARH STATE UNDER "MODEL SOLAR VILLAGE" COMPONENT OF PM SURYA GHAR MUFT BIJLI YOJANA.

Particulars	From Date & Time	To Date & Time	Place
Date of issue of notice inviting bid	**28.10.2026 05:00 PM**	-------	-----
Period of availability of bidding document at website	**28.10.2026 05:00 PM**	**18.11.2026 05:00 PM**	www.creda.co.in, https://eproc.cgstate.gov.in
Submission of Pre Bid queries in writing and through Mail	**28.10.2026 05:00 PM**	**03.11.2026 05:00 PM**	Pre Bid queries can be emailed on credatendercell@gmail.com or To be Submitted hard copy at CREDA HO, Raipur
Pre Bid Meeting	**04.11.2026 03:00 PM**	**04.11.2026 05:00 PM**	To be held at Conference Hall, CREDA H.O. Raipur
Submission of Online Bid (Technical + e Price Bid) and submission of Documents in hard copy	**28.10.2026 05:00 PM**	**18.11.2026 05:00 PM**	Online Bid on https://eproc.cgstate.gov.in & hard copy at CREDA H.O. Raipur (C.G.)
Opening of Technical Bid	**19.11.2026 03:00 PM Onwards**		At CREDA H.O., Conference Hall, Raipur. (https://eproc.cgstate.gov.in)
Evaluation of Technical Bid	**23.11.2026 03:00 PM Onwards**		At Conference Hall, CREDA H.O., Raipur.
Opening of e- Price Bid	**26.11.2026 03:00 PM Onwards**		At Conference Hall, CREDA H.O., Raipur.

EMD-Rs. 1,00,000.00 (in words One Lacs)
Tender Document Cost– Rs. 10,000.00 + 18% GST = Rs. 11,800.00(in words Rupees Eleven Thousand Eight Hundred Only)
EMD and Tender Document Fee to be deposited in CREDA's account via Demand Draft/Pay Order or RTGS/ NEFT.
Document can be downloaded from our website www.creda.co.inor from Chhattisgarh e-Procurement portal i.e. https://eproc.cgstate.gov.in.

CONTENTS

Section	Description	Page No.
	Cover Page & Contents.	1-3
	Notice Inviting BID	4-5
	Check List	6
	Details of EMD	7
	Undertaking of the Bidder	8
SECTION - 1	Instruction For Bidders	9-13
	Eligibility Criteria	9
	Bidding Process/EMD & Bid Document Fee/Submission of Documents/Specification Amendments/GST&PAN/ The Bid	9-10
	Analysis of Rate/Registration of Bidder/Validity/Terms & Conditions /CREDA reserves the right/ Communications/ Bid Document Fee and Earnest Money Deposit.	10-11
	Pre-bid Queries Submission in writing /Technical Criteria/Forfeiture of EMD/Engineering Documents/CMC/Samples/Inspections/Mandatory Deduction/Mandatory Employment/Tax Obligation/Jurisdiction of the court, etc.	11-13
SECTION - 2	General Condition of Contract, Definitions/Proof of Manufacturer/Contract Document/Manner of Execution	14-17
	Variations, Additions & Omissions/Inspection/Completion of Work/ Completion of work/Eligible SI Default Liability	
	Force Majeure/Rejection of works/Extension of time/ Make of Equipment	
	Warrantee Period/Terms of Payment/Penalty/SD/Insurance/Declaration of conflict of interest	17-20
	Bid Evaluation Criteria/Evaluation of Price /Bid/Allocation of work/ Bid Rejection	20-21
SECTION - 3	Scope of Work	22-24
SECTION - 4	General Technical Specification:	25
	Solar PV Modules	25-26
	Inverters	26-28
	Module Mounting Structures (MMS)	28-31
	Metering/Array Junction Box/DCDB/	31-32
	ACDB/ Protection/Earthing Protection/Lightning Protection/ Surge protection	32-33
	Cable/Drawings & Manuals/Miscellaneous	33-34
	Quality Certification, Standard & Testing for Grid Connected Rooftop Solar PV System/Power Plant	34-36
	Compressive Maintenance & Guidelines	36-39
	Technical Specification of Solar Drinking Water Pump	40-72
	Monthly monitoring report format	73-74

Section	Description	Page No.
SECTION - 5	Annexure, Specification, Forms	75
	Annexure – I: Certificate of completion	75
	Annexure–II - Format for Affidavit (Declaration of Conflict of Interest)	76-77
	Annexure – III - e-Price Bid	78
	Annexure – IV - Logo for Module	79
	Annexure – V – Draft Agreement	80-84
	Schedule- I, II, III, IV	85-88
	Site Clearance Certificate	89-91
	Plan of Site	92-93
	END	94

NIT Ref. No. 10028/CREDA/MSV-JC/SS/2026-27 Date:-28.10.2026

NOTICE INVITING BID

CREDA invites request for proposal (RFP) for design, supply, installation and commissioning of Grid-connected Rooftop Solar Photovoltaic Power Plant (Cumulative cap. 143kwp/15nos.) and SPV drinking water pump (cap. minimum 900wp / 1.0 hp dc submersible with 06 meters staging and 5000 liters storage tank*01 nos.) with 5 years onsite warrantee and comprehensive maintenance of different capacities including training at **Village-Khokhra, District-Janjgir-Champa** of Chhattisgarh State under "Model Solar Village" component of PM Surya Ghar Muft Bijli Yojana. as per following details-

SN	Item Description	Tender Document fee	EMD	Essentials
1.	Design, supply, installation and commissioning of Grid-connected Rooftop Solar Photovoltaic Power Plant (Cumulative cap. 143kwp/15nos.) and SPV drinking water pump (cap. minimum 900wp / 1.0 hp dc submersible with 06 meters staging and 5000 liters storage tank*01 nos.) with 5 years onsite warrantee and comprehensive maintenance of different capacities including training at **Village-Khokhra, District-Janjgir-Champa** of Chhattisgarh State	***Rs. 10,000.00 + 18% GST = Rs. 11,800.00***	Rs. 1,00,000.00	As per clause no.1a to 1f of Eligibility Criteria **(Page no.09)**
TOTAL		**Rs.11800.00**	**Rs.1,00,000.00**	

The details of various sites are mentioned in the tender document.

Estimated Value of tender: - Rs. 98.60576 Lakhs.

Important Events and time schedule for this Bid are as follows –

Particulars	From Date & Time	To Date & Time	Place
Date of issue of notice inviting bid	**28.10.2026 05:00 PM**	**-------**	-----
Period of availability of bidding document at website	**28.10.2026 05:00 PM**	**18.11.2026 05:00 PM**	www.creda.co.in, https://eproc.cgstate.gov.in
Submission of Pre Bid queries in writing and through Mail	**28.10.2026 05:00 PM**	**03.11.2026 05:00 PM**	Pre Bid queries can be emailed on credatendercell@gmail.com or To be Submitted hard copy at CREDA HO, Raipur
Pre Bid Meeting	**04.11.2026 03:00 PM**	**04.11.2026 05:00 PM**	To be held at Conference Hall, CREDA H.O. Raipur
Submission of Online Bid (Technical + e Price Bid) and submission of Documents in hard copy	**28.10.2026 05:00 PM**	**18.11.2026 05:00 PM**	Online Bid on https://eproc.cgstate.gov.in & hard copy at CREDA H.O. Raipur (C.G.)
Opening of Technical Bid	**19.11.2026 03:00 PM Onwards**		At CREDA H.O., Conference Hall, Raipur. (https://eproc.cgstate.gov.in)
Evaluation of Technical Bid	**23.11.2026 03:00 PM Onwards**		At Conference Hall, CREDA H.O., Raipur.
Opening of e- Price Bid	**26.11.2026 03:00 PM Onwards**		At Conference Hall, CREDA H.O., Raipur.

Technical Bid and Price Bid shall be submitted online only at https://eproc.cgstate.gov.in However Technical Bid (as per the checklist) also has to be submitted duly signed hard copy at CE (Tender Cell). If there is any discrepancy in the e-Bid and hard copy, only the documents in e-Bid shall be valid.

In no case the hard copy of documents shall be evaluated, they are only for record keeping by CREDA. Bidders are advised to follow the instructions provided for Registration and e-Submission Process accordingly. (For any query about e-bidding please visit user manual at https://eproc.cgstate.gov.in.

Details of this tender are mentioned at Tender Documents which can be downloaded from our website-*www.creda.co.in.*

The Bidder should have to deposit Tender document cost along with EMD as mentioned above through Demand Draft/Pay Order or NEFT/RTGS payable to CREDA Raipur while submitting tender.

Bidders are requested to submit their suggestions/objections/ reservations if any with details so as to avoid any confusion and to ensure clarity and transparency regarding the Bid in writing or by e-mail.

Any Addendum/Corrigendum/Amendment Notice if arises will only be uploaded on CREDA's Website.

CREDA reserves all rights to accept/reject any or all tenders in full/part without assigning any reasons.

Chief Engineer
H.O. CREDA, Raipur (C.G.)

CHECK LIST OF DOCUMENTS TO BE UPLOADED IN THE E-BIDDING PORTAL

To ensure that your Bid uploaded on the https://eproc.cgstate.gov.in. is complete in all respects, please go through the following checklist & tick mark for the enclosures attached with your Bid –

S. No.	Envelope	Description of documents to be uploaded in the e-bidding portal	Complied (Yes/ No)	Page No
1.	A. Pre-Qualification	EMD Fee and tender document fee submission form of the bidder confirmed by CREDA (as on page – 7)		
2.		Scanned copy of Undertaking of the Bidder as mentioned on Page –8 of the tender document on the letter head of bidder		
3.		Scanned copy of original tender document duly signed & with stamp on each page, as a confirmation of acceptance of the Terms & Conditions (T&C).		
4.		PAN, GSTIN issued in the name of the bidder		
5.		Self-certificate from Bidder on not being a debarred from Government contract or a blacklisted company.		
6.		Declaration of conflict of interest - by bidder about any relatives working with CREDA and Affidavit **(Annexure II) (Hard Copy to be submitted as per, Section – 5)**		
7.		Copy of Registration: Certificate as System Integrator of CREDA in SPV Program valid at the time of submission of bid if not registered then he shall have to get registered himself at CREDA prior to agreement		
8.	B. Technical and Financial Qualification	Original Net Worth Certificate duly signed by Chartered Accountant as on 31st March 2025 or 31st March 2026.		
9.		Original certificate for last three financial years Turn over i.e. 2022-23, 2023-24, 2024-25 and/or 2025-26 of work done in On Grid SPV Project.		
10.		Original ITRs for last three financial Years i.e. 2022-23, 2023-24 & 2024-25 and/or 2025-26 of the bidders along with certified copy of audited balance sheet		
11.		Completion and Performance Certificates for **m**in three years' experience out of last five consecutive financial years i.e. 2021-22,2022-23,2023-24, 2024-25, and 2025-26 in installation and commissioning of grid connected SPV Power Plants **by the Bidder in any Govt. Scheme of any state**. **(Annexure I)**		
12.		Proof of being Eligible Manufacturer of SPV Modules/ PCU/other BOS if applicable.		
13.		Manufacture Authorization certificates of major components of solar power plants.		
14.		Technical Data Sheet for each component showing full technical details.		

Note:- Bidders shall have to also submit the original hard copies of the above mentioned documents.

Name of A/c	CREDA
Bank & Branch Name	ICICI Bank, Pachpedi Naka, Raipur
Bank Account Number	134601000400
Branch IFSC Code	ICIC0001346

Bid No. and Date	
Name of the Bidder	
Bidder's Bank Account Details	
(i) Name of the bank	
(ii) Branch	
(iii) IFSC Code	
(iv) Account No.	
(v) Transaction reference number	EMD - _____ ;Bid Document Fee - _____
(vi) Date of transaction	EMD - _____ ;Bid Document Fee - _____
(vii) EMD	Rs. ……..…./- In Words (Rs……)

Details of EMD and Tender document fee

(Sign & Seal of the bidder)

***NOTE –**

1. **The EMD and tender document fee shall have to be deposited as mentioned in the NIT in CREDA's bank account (amount mentioned above). Bidder shall have to upload the transaction details as DD/Pay Order/ RTGS / NEFT above or a scanned copy of the DD (if transaction is done through DD)**
2. **In case the transaction is done through DD, the original DD has to be submitted in envelope as per Clause 6(d).**

UNDERTAKING OF THE BIDDER
(To be submitted on letter head)

I/We have read carefully and examined the notice inviting Bid, schedule, General Rules and terms and conditions of the contract, special conditions, Schedule of Rates and other documents and Rules referred to in the Bid document for the supply.

I/We hereby tender my rates for the execution of the work for CREDA as specified within the time stipulated in the schedule in accordance with all aspects with the specifications, designs, drawings and instructions with such conditions so far as applicable.

I/We agree to keep the Bid valid for One Hundred Eighty (180) days from the due date of submission thereof and not to make any modifications in its terms and conditions.

A sum of **Rupees 1,00,000/-** is hereby forwarded as **Earnest Money** in the form of crossed Demand draft/Pay order / RTGS / NEFT payable to CREDA at Raipur (C.G.). If I/We fail to commence or complete the sanction ordered in specified time or fail to fulfill the any condition of Bid document, I/We agree that the CREDA shall, without prejudice to any other right or remedy, be at liberty to forfeit the said Earnest Money absolutely. The said Earnest Money shall be retained by CREDA towards security deposit to execute all the works referred to in the Bid documents upon the terms and conditions contained or referred to therein and to carry out such deviations as may be required by CREDA.

I/We hereby declare that I/We shall treat the Bid documents, specifications and other records connected with the work as secret/confidential and shall not communicate information derived there from to any person other than a person to whom I/We have authorized to communicate the same or use the information in any manner prejudicial to the safety of CREDA/Government.

I/We shall abide to all the laws and shall be responsible for making payments of all the taxes, duties, levies and other Govt. dues etc. to the appropriate Govt. departments.

Our GST Registration No._____.The PAN No. under the Income Tax Act is _____.

I/We shall be responsible for the payment of the respective taxes to the appropriate authorities and should I/we fail to do so, I/we hereby authorize CREDA to recover the taxes due from us and deposit the same with the appropriate authorities on their demand.

I/We declare that none of our relatives is working in CREDA either on Regular/Contract/Placement basis or I/We don't have any partnership/subcontract obligation with any employee working in CREDA at present directly or indirectly and we will not enter in such obligation in future also. If any breach of declaration is found than we will be responsible for our debarment and any other action taken by CREDA.

Dated: **Signature**

Place: **Name of Bidder with seal.....**

Witness:

Signature: .....
Name: .....
Postal Address:
.....
.....
.....

SECTION - 1
INSTRUCTIONS FOR BIDDERS

1. ELIGIBILITY CRITERIA-

a. MINIMUM EXPERIENCE

Bidders must have minimum three years' experience out of last five consecutive financial years i.e. 2021-22, 2022-23,2023-24, 2024-25, and 2025-26 as per the details mentioned below-

Experience Required
The bidders should have experience of successful execution of work for design, supply, installation, testing & commissioning of grid connected rooftop photovoltaic power plant of cumulative capacity **at least 150kWp On-grid with minimum 10 kWp single On-grid SPVPP and having** experience of SPV Drinking Water Pump (Cap. minimum 900wp /1.0 hp dc submersible with 06 meters staging and 5000 liters storage tank) in any Government Scheme.

b. Bidders will have to submit experience of certificates **(as mentioned above at 'a'),** containing complete system details from the concerned state/central agencies/department/State Govt./ State PSU/ Central PSU/ SEB/ Power Utility/ Any other govt. body/ Semi. Govt. organization while submitting techno-commercial bid for respective capacity range categories (Note: All such copies must be self-attested by the authorized signatory). Experience certificate shall be submitted in attached format (as per **Annexure–I**) or other format containing similar information shall be considered only in-case submitted in Hindi/English Language only. At the time of opening of technical bid, bidders shall have to present original reports/certificate as above.

c. Bidders must have **a Positive Net worth (Positive Net worth means "Net value of the Assets minus (-) Net value of liabilities")** as on **31st March 2025 or 31st March 2026**. They shall have to submit an **Original CA Certified Certificate** duly signed by a qualified and registered Chartered Accountant having UDI number as a proof.

d. Bidders should have following aggregate turnover of minimum Rs. 50 Lakhs in any three consecutive years out of four years i.e., 2022-23, 2023-24, 2024-25 or 2025-26 in SPV Projects (On grid/Off-Grid). Certified copies of the annual returns and audited balance sheet submitted to the Registrar of Companies/ Income Tax Authorities should be enclosed. For the preceding years an Original Summarized Sheet of turnover certified by registered CA must been enclosed.

e. Bidder who is debarred from business by Govt. /Govt. Agency in any state would not be eligible to participate in this bid. A self-declaration should be submitted by the bidder to this effect, failing which bid shall be rejected.

f. Even though the bidders meet the above qualifying criteria, they are subject to be disqualified if they have:

i. Made misleading or false representations in the forms, statements, affidavits and attachments submitted in proof of the qualification requirements; and/or
ii. Record of poor performance such as abandoning the works, not properly completing the contract, inordinate delays in completion litigation history, or financial failures etc; and/or
iii. Participated in the previous bidding for the same work and had quoted unreasonably high or low bid prices and could not furnish rational justification for it to CREDA

2. BIDDING PROCESS-

For ease of accessing the e-bidding website and registration the following is to be done by bidder -

a. Visit https://eproc.cgstate.gov.in

b. Prospective bidders are requested to download, read and understand the Manuals present on the website so as to clearly understand the bid submission process.

c. The user will be directed to e-bidding page where all information regarding registration is available along with helpline details.

d. Technical bid and Price Bid shall be submitted online only at https://eproc.cgstate.gov.in latest by **05.00 PM on 18.11.2026**. Bids submitted after scheduled time and date shall not be considered.

3.EARNEST MONEY DEPOSIT (EMD) and Tender Document fee -

Earnest Money Deposit of Rs. One Lakhs along tender document fee of Rs 11800.00 for submitted in the form of Demand Draft/Pay Order or RTGS/NEFT as mentioned in the **NIT** vide no. 10028 Date: 28.10.2026, EMD submitted in any other form e.g. **Cash/Bank Guarantee/FDR/TDR etc. shall not be accepted.**

4.SUBMISSION OF DOCUMENTS -

a. All the documents including technical and financial Bid should be submitted online on https://eproc.cgstate.gov.in as per the items mentioned in the Check list on page no.06 in this bid.

b. Bidders are advised to finish all the bidding portal related activities such as registration, USB certificate/token approval, and payments etc. well in advance so as to avoid last minute difficulties during the bid submission.

c. Bidders are also advised to make themselves fully aware with the bid submission mechanism to avoid last minute hassles and doubts during bid submission. CREDA shall only entertain genuine technical issues/glitches, provided that the bidder submits evidence regarding the same.

d. Additionally, the bidders shall also have to submit all the documents, in original hard copy, as required in this bid as per the checklist on page 06 during the opening of technical bid. Bidders shall have to submit only the documents as per the checklist in the following envelopes.

Envelope A –Pre Qualification Documents (original DD should be submitted in this envelope)

Envelope B –Financial Qualification Documents.(GST, PAN; Net worth; Turnover; ITR and Balance Sheet)

Envelope C –Technical Qualification Documents

Note: **The Envelopes mentioned above are only for submission's sake only and must not be related with the Envelopes mentioned in the context of the checklist on page-06.** The documents submitted in hard copy (offline) before CREDA officials must match with those submitted in the https://eproc.cgstate.gov.in. Any document other than the uploaded document shall not be considered. CREDA's tender committee will only evaluate the documents submitted on https://eproc.cgstate.gov.in. **In no case the hard copy of documents shall be evaluated, they are only for record keeping by CREDA.**

5. SPECIFICATION AMENDMENTS-

a. The Specifications of components of items should be as per as Specified in the Bid. If any amendments are issued by MNRE/CREDA in due course of time, in this context, then those shall be applicable under this Bid.

b. CREDA reserves the right to amend or change minor specifications of the entire or any component of Solar Power Plant system even after the issuance of sanction order as per the site conditions and demand.

6. GST & PAN-

Bidder shall have to submit copies of GST registration number and PAN numbers issued by the appropriate authority.

7. THE BID-

a. The Pre-Qualification, Technical-Financial Qualification Documents and Price Bid, other related documents must be uploaded in the portal i.e. https://eproc.cgstate.gov.in **from 28.10.2026 05:00 PM onward till 18.11.2026 up to 05:00 PM.**

b. Nobody is authorized to receive or grant receipt for Bid delivered on behalf of CREDA. **Bid received through any other means shall not be considered and shall be rejected.**

8. ANALYSIS OF RATE -

Bidder should quote their rates considering variation of site conditions and all other factors in price of different components and keeping the quantum and quality of work in mind. In the event that any bidder quote rates that are exceptionally low or exceptionally high and are found to be unreasonable of non-workable in the opinion of CREDA, the Tender Evolutions committee reserves the right to conduct a market survey and/ or rate analysis to assess the feasibility of such rates. The Findings of such survey/analysis shall be placed on record, CREDA may reject such bid if the quoted rates are determined to be unworkable of detrimental to the satisfactory execution of the work.

9. REGISTRATION OF BIDDER–

The Bidder should be registered with CREDA as a System Integrator at the time of submission of Bid. If not registered then he shall have to get registered himself prior to the execution of the contract agreement with CREDA. Further, all component vendors proposed by the bidder for supply of major system components under the scope of work shall also be registered with CREDA prior to the execution of the Contract Agreement. Failure to obtain the requisite registrations within the stipulated time shall render the bidder ineligible for award of the contract and CREDA shall be at liberty to take appropriate action as per the tender conditions.

10. VALIDITY-

Full descriptive particulars and complete specifications should accompany the offer. Offers should be kept open for acceptance for at least **180 days** from the date of opening. After finalization of this Bid the approved rates shall be **valid till One year**s; however CREDA shall have liberty to increase or decrease this validity if needed.

11. TERMS & CONDITIONS-

a. The terms, conditions and specifications mentioned in Bid document shall be binding on the Bidders and no condition or stipulation contrary to the conditions shall be acceptable. It may please be noted that the Bidders who do not accept terms and conditions stipulated in this Bid documents, their offers shall be liable to be rejected out-rightly without assigning any reason whatsoever.

b. Each page of Bid document & enclosures shall be signed by the Bidder and seal affixed. All the pages of the documents issued must be submitted along with the technical offer. In case of any corrections / alterations in the Bid, the Bidder should attest the same; otherwise Bids may not be considered.

c. Bidders are also instructed to submit their Bids in properly arranged manner (with index, proper paging and with flags on important documents). Incomplete, lose, conditional or improper arranged Bids will not be accepted.

12. CREDA RESERVES THE RIGHT-

a. To reject or accept any or all Bids fully or partly without assigning any reason on the grounds considered advantageous to CREDA, whether it is the lowest Bid or not.

b. To split the quantities against the Bid further for the same items/work. No reason will be assigned by CREDA for this and will be binding on the Bidders.

c. To increase or decrease of aggregate quantities as per discretion or circumstances.

d. Due to large quantum of work & limitation of the time period for completion of the work CREDA may, if required, take consent from other eligible Bidders if they agree to work on rates approved by CREDA.

e. CREDA may undergo agreement with those eligible Bidders who give consent to work on rates standardized by CREDA and may allocate work to them. Rates approved through this Bid may be standardized for all eligible Bids to work in one year shall be valid. However CREDA reserves right to curtail or extend this period.

f. CREDA reserves the right to amend or change minor specifications of the entire or any component of Solar Power Plant system even after the issuance of sanction order as per the site conditions and demand.

13. COMMUNICATIONS -

a. All the communication between Bidder and CREDA shall be in writing. Notice sent by Fax or other Electronic means shall be effective on confirmation of the transmission. Notice sent by registered post or speed post shall be effective of delivery or at expiry of normal delivery period as under taken by Postal Service.

b. Offers through Telegraph/Fax/Emails/Post/Courier or open offers etc. received shall be summarily rejected.

14. PRE-BID MEETING AND SUBMISSION OF QUERIES-

a. All suggestions, doubts, confusion, request, queries etc., shall have to be presented to CREDA in writing or through email to credatendercell@gmail.com on or before **03.11.2026 till 05:00 PM**. After that any representation in this regard shall not be considered.

b. The purpose of pre-bid queries is to clarify issues and questions related to this Bid that can be raised at that stage. Any amendments in the bid documents which may become necessary as a result of pre-bid queries received shall be part of original Bid document and communicated through corrigendum on CREDA website www.creda.co.in and on https://eproc.cgstate.gov.in.

15. TECHNICAL CRITERIA-

The Bidder should have sufficient technically qualified and well-experienced manpower for execution of the project and after sales service of the systems. These details may be called by CREDA and in case there is any deficiency found the Bidder may be debarred.

16. FORFEITURE OF EARNEST MONEY DEPOSIT-

It should be clearly understood that in the event of Bidder failing to enter into the agreement in the prescribed format on their quoted rates and also fails to execute assigned works under any Scheme of CREDA, within stipulated time, if he is so communicated within the validity period of the offer, the full amount of earnest money will be forfeited and Bidder shall be debarred/ black listed from future business with CREDA including future participation in all bids up to maximum period of three year. CREDA's decision in this regard will be final and binding on the Bidders.

17. PRICE OF SUPPLY OF SOLAR POWER PLANT SYSTEMS WITH INSTALLATION, COMMISSIONING & TESTING -

a. The Price quoted for all configuration of each category of Grid connected SPV Power Plant and Solar Drinking Water Pumps with 5 years system warranty and CMC. The GST shall be paid extra as per prevailing rate (the GST regulation notification no. 08/2021-Central tax (Rate) dated 30.09.2021, GST notification no. 09/2025-Central Tax (Rate) dated 17.09.2025). The prices shall be filled exactly as per **e-Price Bid enclosed**.
b. Any change in GST shall be become applicable during the period of contract.
c. In this regard if there is any change in the composition ratio of goods and services by any Authority/ Courts, same shall be applicable.
d. There shall be no escalation of rates under any circumstances.

18. ENGINEERING DOCUMENT-

Bidders will have to submit Engineering Documents with technical details, drawings, Specifications of components and make etc. to CREDA for approval, as and when asked by CREDA. Works may only be started out only after approval of the Engineering Document and their samples.

19. COMPREHENSIVE MAINTENANCE CONTRACT (CMC) -

Comprehensive Maintenance Contract shall have two distinct components as described below-

a. Preventive / Routine Maintenance: This shall be done by the contractor on monthly basis regularly including activities such as cleaning and checking the health of the Grid connected SPV Power Plant and Solar Drinking Water Pumps cleaning of module surface, tightening of all electrical connections and any other activity that may be required for proper functioning of the Grid connected SPV Power Plant and Solar Drinking Water Pumps as a whole.

b. Breakdown / Corrective maintenance: Whenever a complaint is lodged by the user/CREDA, the bidder shall attend to the same within a reasonable period of time (not exceeding 07 days from the date of complaint) and rectify the defects, period. Replacement of the defective component/ spares if required as and when such requirement would arise. The replacement work shall be carried out within the specified time limit i.e. maximum 07 days for minor replacement/repair and 15 days for major replacement/repair of solar systems.

It is mandatory that the contractor shall submit a certificate, about the rectification/replacement work done, from the concerning beneficiary(s) to the DO, failing which it will be assumed that the contractor has not performed its duties. Major and minor replacement/repair shall be defined by CREDA separately.

For carrying out the maintenance service during CMC effectively, the system integrator shall establish one local service center at suitable place (preferable at the same district).

Failure to adhere to the CMC guidelines (as on page no. 34) will result in penal action including debarring from participation in next tender.

c. Facilities at the local Service Center: The bidder shall maintain the following facilities at the Local Service Centre for ensuring highest level of services to the end user:

i. Adequately trained manpower specifically trained by the bidder for carrying out the service activities.
ii. Sufficient spare parts, to extend services at the beneficiary's place /site(s).

d. The System Integrator shall submit certificates of maintenance / monthly visits in the enclosed format **(Format A)** to respective DOs on quarterly basis, along with the service reports.

e. If the bidder fails to repair the systems against the complaints of breakdown /Corrective maintenance to ensure 100% working status during CMC period in stipulated period i.e. maximum 30 days. Repair / replacement work will be done by CREDA from their SD or any other due payments available with CREDA.

f. A detailed methodology stating the plan to undertake the work of Maintenance Contract, proposed network of service centers should be submitted at the time of Contract.

g. Extended CMC provision may be provided by the bidder for complete Solar Systems after lapse of five years, on annual basis for further five years, for which a separate rates may be quoted in the price bid.

20. INSPECTIONS -

CREDA reserves right to inspect the material at Godowns/Temporary stores before dispatch and also at works sites.

21. MANDATORY DEDUCTION -

I. CREDA shall deduct various statutory taxes like IT TDS, GST TDS and various cess on the payment made by the beneficiaries as contribution to SI's and subsidy payable by CREDA i.e. total cost of system.

II. **WCT**- This deduction will be made at the rate of 01% on the total cost (including beneficiary share) of the system.

III. **Royalty**- In the absence of Royalty clearance certificate royalty will be deducted at the market rate on the consumption of minor minerals like sand and aggregates.

22. CORRUPT OR FRAUDULENT PRACTICES -

a. CREDA requires the bidder/SI to strictly observe the laws against fraud and corruption in force in India, namely, Prevention of Corruption Act, 1988.

b. It is required that each bidder/SI (including their respective officers, employees and sub-contractors) adhere to the highest ethical standards, and report to the Government/ Department all suspected acts of fraud or corruption or coercion or collusion of which it has knowledge or become aware, during the tendering process and throughout the negotiation or award of contract.

23. MANDATORY EMPLOYMENT-

Qualified diploma engineer with minimum wage rupees 15000/- per month for works above rupees 20 lacs and Qualified graduate engineer with minimum wage rupees 25000/- per month for works above rupees 01 crore shall have to be deployed by the System Integrator. (As per CG Govt.'s order no. F7-17/2020/1-6 Dated 02.12.2020).

24. TAX OBLIGATIONS-

CREDA shall deduct TDS for Income Tax, applicable cess on Civil Work etc. under various acts and deposited with the appropriate authority. Costs and taxes before execution of agreement with CREDA, so as to ensure tax deposition as per Government Rules accordingly.

25. JURISDICTION OF THE COURT-

Any dispute arising out of the contract shall be subject to the jurisdiction of Hon'ble High Court of Chhattisgarh.

SECTION - 2
GENERAL CONDITIONS OF CONTRACT

1. DEFINITIONS -

In writing General Conditions of Contract, the specifications and bill of quantity, the following words shall have the meanings hereby indicated, unless there is something in the subject matter or content inconsistent with the subject.

a. **CREDA** shall mean the Chhattisgarh State Renewable Energy Development Agency represented through the Chief Engineer.

b. **Work** shall mean any work entrusted to the Bidder as mentioned in the scope of work and Work Order.

c. The "**Engineer in charge**" shall mean the Engineer or Engineers authorized by CREDA for the purpose of this contract. Inspecting Authority shall mean any Engineering person or personnel authorized by CREDA to supervise and inspect the erection of the Grid connected SPV Power Plant and Solar Drinking Water Pumps.

d. "**The Eligible SI/Bidder**" shall mean the Bidder awarded with the contract or their successors and permitted assigns. Contract Price shall mean the sum named in or calculated in accordance with the provisions of the contract as the contract price. General Conditions shall mean the General conditions of Contract.

e. "**Specifications**" shall mean the specifications annexed to these General Conditions of contract and shall include the schedules and drawings attached thereto or issued to the eligible Bidder from time to time, as well as all samples and pattern, if any,

f. "**Month**" shall mean calendar month. "Writing" shall include any manuscript, typewritten, printed or other statement reproduced in any visible form whether under seal or written by hand.

2. PROOF OF MANUFACTURER-

Those bidders who are also manufacturers of major component of SPVPP such as SPV Modules, PCU, and Structures of Grid connected SPV Power Plant and Solar Drinking Water Pumps shall have to submit proof of their manufacturing unit and appropriate registration documents and list of Machineries and Equipment's.

3. CONTRACT DOCUMENT-

The term "Contract" shall mean and include the General conditions, specifications, schedules, drawings and Work Orders etc., issued against the contract schedule of price or their final general conditions, any special conditions applying to the particular contract specification and drawings and agreement to be entered into. Terms and conditions not herein defined shall have the same meaning as are assigned to them in the Indian contract Act or any other Act in vogue or by any person of common knowledge and prudence.

4. MANNER OF EXECUTION-

a. Execution of work shall be carried out under CAPEX Mode Scheme of CREDA and MNRE's scheme guidelines in an approved manner as outlined in the technical specifications or where not outlined, in accordance with desired Specifications laid down by CREDA, to the reasonable satisfaction of the Engineer.

b. Successful Bidder / Bidder here-in-after called the **SI** (System Integrator).

i. After receipt of LOI from CREDA the eligible SI shall conduct a detailed survey of site and submit site details feasibility report and in prescribed format **(Form A & B)** after due verification and signatures of beneficiary department. All necessary documents and survey details shall have to be submitted in concerned District Office of CREDA in prescribed manner.

ii. SI shall also have to submit layout plan duly consented and signed by authorized signatory/competent authority of beneficiary department.

iii. SI shall also submit detailed engineering drawing and documents to Engineer-in-Charge of CREDA.

iv. Engineer-in-Charge of CREDA shall examine these reports. After due verification process the same shall be forwarded to EE/District In charge of Concerned Zonal Office/District Office of CREDA. Engineer-in-charge may visit the site if he/she is not satisfied with survey report.

v. In case Engineer-in-Charge of CREDA is conveyed that the site is not suitable for installation of Grid connected SPV Power Plant and Solar Drinking Water Pumps, he/she will inform concerned beneficiary organization/ department accordingly and request for alternative site /necessary action.

vi. Executive Engineer of concerned Zonal Office CREDA will decide the technical feasibility and layout plan of site. Executive Engineer may visit the site if he/she is not satisfied with survey report.

vii. After satisfaction concern Executive Engineer will forward the site clearance report, Engineering Drawing with Detailed Project Report (DPR) & technical feasibility to Head Office CREDA for issuance of work orders.

viii. Head Office, CREDA shall be final authority to approve or reject site finalization recommended by Zonal Offices.

ix. Concerned Engineer-in-Charge of CREDA after his/her satisfaction shall issue the work order to eligible SI for installation of Grid connected SPV Power Plant and Solar Drinking Water Pumps.

x. After issuance of LOI/Work Order(s), Executive Engineer of concerned Zonal Office CREDA shall finally approve site layout in writing in prescribed format.

xi. The SI shall start work within 15 days after the date of approval of site layout.

c. All the materials required for the installation of Grid connected SPV Power Plant and Solar Drinking Water Pumps as per Work Order issued shall be kept at site in the custody of the SI. CREDA shall not be responsible for any loss or damage of any material during the installation.

d. All the electrical works should be done as per various provisions of Indian Electricity Act. The persons engaged for carrying out electrical works should have a valid **A-class** license or above issued by licensing board of Chhattisgarh.

e. After work is started, CREDA may carry out inspections at various stages at its discretion.

f. After installation, joint inspection shall be done in presence of SI and CREDA and (after successful synchronization with the grid connected SPV Power Plant) and Solar Drinking Water Pumps and its approval from CREDA, a JCC shall be signed and the necessary documents shall be forwarded for payments as per guidelines and procedures of CREDA.

5. VARIATIONS, ADDITIONS & OMMISSIONS-

CREDA shall have the right to alter, amend, omit, split or otherwise vary the quantum of work, by notice in writing to the SI. The eligible SI shall carry out such variation in accordance with the rates specified in the contract so far as they may apply and where such rates are not available; those will be mutually agreed between CREDA and the eligible SI.

6. INSPECTION-

a. The Engineer-in-Charge or his authorized representative(s) shall be entitled at all reasonable times to inspect and supervise and test during supply, installation and commissioning. Such inspection shall not relieve the eligible SI from their obligations under this contract.

b. Material can be inspected before dispatch or in transit by the authorized representatives of CREDA at the factory or godowns at the cost of the eligible bidder, if desired by CREDA. Additionally, CREDA reserves the right to inspect the manufacturing unit in cases where the bidder and the manufacturer of the material are different entities. Furthermore, CREDA may also blacklist or debar the manufacturer in case of any manufacturing defect.

c. CREDA will undertake real time performance and quality test of randomly selected solar power plant and components during the course of execution as per the specifications and guidelines laid by CREDA to ensure quality and performance of solar power plants and its components.

7. COMPLETION OF WORK-

Time being the essence of contract, the installation of the Grid connected SPV Power Plant and Solar Drinking Water Pumps shall be completed within the time schedule prescribed in the Work Order.

8. ELIGIBLE SYSTEM INTEGRATOR'S LIABILITY IN CASE OF DEFAULT-

CREDA may by written notice of default to the eligible SI, terminate the contract in circumstances detailed hereunder –

a. If in the opinion of the CREDA, the eligible SI fails to complete the work within the time specified in the Work Order or within the period for which extension has been granted by CREDA to the eligible SI.

b. If in the opinion of CREDA, the eligible SI fails to comply with any of the provisions of this contract.

c. In the event of CREDA terminating the contract in whole or in part as provided in paragraph (a) above, CREDA reserves the right to engage another eligible SI or agency upon such terms and in such a manner as it may deem appropriate and the eligible SI shall be liable to CREDA for any additional costs or any losses caused to CREDA as may be required for the completion of erection of the Grid connected SPV Power Plant and Solar Drinking Water Pumps and or for penalty as defined under this Bid document until such reasonable time as may be required for the final completion of the work. CREDA may debar such a defaulter SI for up to three years from taking participation in taking part in all activities of CREDA.

d. If the bidder does not complete the work in stipulated time and delays the completion then penalty may be imposed on bidder for the delayed period to compensate the inflation hike in material cost. So that no extra burden incurred on the next bidder to whom the work will be re-allotted

e. In the event CREDA does not terminate the contract as provided in paragraph (a) the eligible SI shall continue performance of the contract, in which case he shall be liable to CREDA for penalty for delay as set out in clause 16 until the work is completed.

9. FORCE MAJEURE-

The eligible SI shall not be liable for any penalty for delay or for failure to perform the contract for reasons of FORCE MAJEURE such as of God, acts of public, enemy, LWE problems, acts of government, cyclone, fires, floods, epidemics, quarantine restrictions, strikes, freight embargoes provided that if SI shall submit delay notice with appropriate cause of delay to the CREDA in writing within **15 days** of force majeure. CREDA shall verify the facts and may grant such extension as facts justify. Delay in supply of any accessories of solar power plants etc. by the related vendors, to whom the Bidder has placed order, shall also not be treated as force majeure.

10. REJECTION OF WORKS -

In the event of any of the material supplied/work done by the eligible SI is found defective in material or workman ship or otherwise not in conformity with the requirements of this contract specifications, CREDA shall either reject the material and/or work and advise the eligible SI to rectify the same. **CREDA may impose penalty for such rejection up to the 200% cost of the entire system. Habitual/repeated offenders shall be black listed/ debarred to participate in the any Bid/ Activity of CREDA up to three years.** The eligible SI on receipt of such notices shall rectify or replace the defective material and rectify the work free of cost. If the eligible SI fails to do so CREDA may-

a. At its option replace or rectify such defective materials and/or work and recover the extra cost so involved from the eligible SI plus **15%** service charges of the cost of such rectification, from the eligible SI and/ or terminate the contract for balance work/ supplies with enforcement of penalty **as stated above**.

b. Defective materials/workmanship will not be accepted under any conditions and shall be rejected outright without compensation. The eligible SI shall be liable for any loss/damage sustained by CREDA due to defective work **with enforcement of penalty as stated above**.

11. EXTENSION OF THE TIME-

If the completion of installation is delayed due to any reason beyond the control of the eligible SI, the eligible SI shall without delay give notice to the CREDA in writing of his claim for an extension of time. CREDA on receipt of such notice may or may not agree to extend the contract/delivery date of the Grid connected SPV Power Plant and Solar Drinking Water Pumps as may be reasonable but without prejudice to other terms and conditions of the contract. Chief Executive Officer, CREDA has full right for time extension.

12. MAKES OF EQUIPMENTS TO BE USED IN THE WORK-

a. The Solar Modules, String Inverter, DC/AC Junction boxes with isolators & Other BOS should be as per BIS/IEC/CE/IES standards as applicable.

b. The eligible SI has to ensure that equipment's are as per Technical Requirements of guidelines of MNRE and CREDA as complied with. The material/works for which CREDA/MNRE or BIS or ISI specification is not available, engineer-in-charge of the works will examine and approve the material/works, preferably of all makes on which CREDA has report of satisfactory performance

c. Manufacturer Authorization Form (MAF) on Manufacturer's Letter head of Solar Modules/ String Inverter, which the SI is intending to use in the installation, shall be submitted with technical bid.

d. The SI shall ensure that all the major components of the Solar Power Plant such as SPV Modules, String Inverter and other BOS are procured from registered vendors of CREDA of respective components.

13. WARRANTEE PERIOD AND POST INSTALLATION SERVICES-

a. The work done/material supplied by the eligible SI should be warranted for satisfactory operation and against any defect in material and workmanship including String Inverter and Structures and other balance of equipment, at least for a period of **5 (five) years,** from the date of commissioning of the Grid connected SPV Power Plant and Solar Drinking Water Pumps other works as per scope of work. During the warrantee period the bidder shall, at his own cost and risk, repair, rectify or replace any defective equipment, component or part at the installation site without any additional financial implication to the Purchaser, in accordance with the standard warrantee terms and conditions of the OEM

b. The decision of the Technical Committee of CREDA in respect of warrantee claims, defects, repair/ replacement, requirements and interpretation of warrantee provisions shall be final and binding on all bidders

c. Failure to comply with the warrantee obligations and directions of CREDA may attract penal action, including forfeiture of EMD and Blacklisting/Debarment of the bidder, as per the applicable provisions of the tender document

d. Warrantee on SPV Modules shall be for **10 (ten) years** through successful bidder from the date of commissioning of the grid connected SPV Power Plants must be warranted for their output peak watt capacity, which should not be less than **90%** at the end of **10 years** and not less than **80%** at the end of **25 years**.

e. The above warrantee certificates shall be furnished to the CREDA for approval. Any defect noticed during this period should be rectified by the supplier free of cost upon written notice from CREDA provided such defects may be due to bad workmanship or bad materials used.

f. The warrantee period shall be extended by the period during which the plant remains non-operative due to reasons within control of the eligible SIs.

g. Care should necessarily be taken to make the Grid connected SPV Power Plant and Solar Drinking Water Pumps operational, once the reporting of the fault/non-operational status is done, within 5 days. If the Grid connected SPV Power Plant and Solar Drinking Water Pumps is not made operational within **07 days,** CREDA may rectify the same at the cost of SI and the warrantee period shall be extended accordingly for delay period.

If any system becomes nonworking due to fault in any component then CREDA will have the right to take action against the vendor/manufacturer who has supplied that component to the system integrators. The vendor/manufacturer in such case will be responsible to rectify/replace the faulty components, failing which the vendor/manufacturer may be blacklisted and debarred from all the activities of CREDA up to 03 Years.

h. The Bidder shall provide Onsite Warranty for the supplied equipment/material for a period of Five (05) years from the date of successful commissioning and acceptance by the CREDA. During the warranty period, the Bidder shall, at its own cost and risk, repair, rectify or replace any defective equipment, component or part at the installation site without any additional financial implication to the CREDA, in accordance with the standard warranty terms and conditions. The decision of the Technical Committee of CREDA in respect of warranty claims, defects, repair/replacement requirements and interpretation of warranty provisions

shall be final and binding on all bidders. Failure to comply with the warranty obligations and directions of CREDA may attract penal action, including forfeiture of EMD and blacklisting/debarment of the bidder, as per the applicable provisions of the tender document.

i. System Integrators shall have to establish their service stations in the allocated area and shall have to keep sufficient quantity of spares and man power to ensure proper service network for taking care of smooth functioning of Grid connected SPV Power Plant and Solar Drinking Water Pumps installed by them. SI shall have to give a toll-free number to register complaints.

14. TERMS OF PAYMENT-

a. 90% of the cost of the work order (excluding GST) after successful installation and commissioning (Synchronization is mandatory for Grid Connected Solar System) of the Solar Systems and submission of JCC in hard copy in concerned CREDA Zonal/District Office and recommendation of District Level committee (DLC) as per MNRE sanction order and subjected to availability of Fund from MNRE.

b. Balance 10% of the eligible payment (excluding GST) shall be retained by CREDA as Security Deposit for a period of **60 Months** from the date of commissioning**.**

c. GST shall be paid extra at the rate applicable at the time of billing.

15. PENALTY FOR DELAY IN COMPLETION OF CONTRACT-

a. If the eligible SI fails to complete the assigned work within the schedule time specified in the Work Order or any extension granted there to, **CREDA will recover from the SI as penalty of 0.5 percent per week or two percent (2%) per month of the system price excluding GST for every delayed system**. For this purpose, the date of Synchronization/Commissioning shall be reckoned as the date of completion. The total penalty shall not exceed 05% (Five Percent) of the cost. The eligible SI shall not be liable for any penalty for delay or for failure to perform the contract for reasons of FORCE MAJEURE.

b. Review of the progress of installation of Solar Power Plant allocated to SIs shall be done from time to time by CREDA and if the progress of installation is found unsatisfactory, CREDA shall allocate of entire remaining uninstalled system or their part of can be re-allocated to other eligible SI as per discretion of CREDA.

16. SECURITY DEPOSIT (SD)-

a. The Earnest Money shall be retained by CREDA up to the duration of validity of Tender.

b. Beside this 10% of the cost shall also be retained as SD during the five years of warrantee period. No interest shall be payable on the SD.

c. Period for which EMD and SD are to be retained may be extended in case the warrantee period is extended due to non performance of the system.

d. All costs of damages and delays for which the eligible SI is liable to the CREDA will be deducted from any money due to the eligible SI including the security deposit of any project under CREDA.

17. INSURANCE-

The eligible SI shall arrange insurance coverage for the materials and Solar Power Plant System at his/ beneficiary's custody for the work under execution and successful commissioning and subsequent handover to the beneficiary. The eligible SI shall take up insurance or such other measures for the manpower so as to cover the claim for damage/accident under workmen's compensation Act and other applicable State/Central laws. CREDA shall not bear any responsibility on this account.

18. PENALTY DUE FROM THE ELIGIBLE SI-

All costs of damages and delays for which the eligible SI is liable to the CREDA will be deducted from any money due to the eligible SI including the security deposit of any project under CREDA. Additionally, CREDA reserves the right to blacklist or debar such a bidder from participating in future projects or activities of CREDA upto 03 (three) years.

19. RESPONSIBILITY OF ELIGIBLE SI-

Notwithstanding anything mentioned in the specifications of subsequent approval or acceptance of Solar System by CREDA, if any, the **ultimate** responsibility for satisfactory performance of the entrusted work shall rest with the eligible SI. If in any case the eligible SI does not complete the work as per the Work Orders issued to them then CREDA may take over the task & complete the project at the risk and cost of eligible SI.

20. RESPONSIBILITY TO RECTIFY THE LOSS AND DAMAGE-

If any loss or damage occurs to the work or any part thereof or materials/plant/equipment's for incorporation therein the period for which the eligible SI is responsible for the cause thereof or from any cause whatsoever, the eligible SI shall at his own cost rectify/replace such loss or damage, so that the permanent work confirms in every respect with the provision of the contract to the satisfaction of the Engineer. The eligible SI shall also be liable for any loss or damage to the work/equipment's occasioned by him in course of any operation carried out to him during performing the contract.

21. RESPONSIBILITY TOWARDS THE WORKMAN OR OUT SIDERS–

a. The eligible SI shall have to take insurance coverage from any authorized Insurance Company against Workmen compensation due under Workmen Compensation Act and submit copy of the insurance document before issuance of Work Order.

b. The eligible SI shall ensure all safety measures during execution and repairs of the work. CREDA, will, in no case be responsible for any accident fatal or non-fatal, caused to any workman or outsider in course of transport or execution or repairs of work.

c. All the expenditure including treatment or compensation will be entirely borne by the eligible SIs. The eligible SI shall also be responsible for any claims of the workers including, labor payments PF, Accidental Insurance, Gratuity, ESI & other legal obligations.

d. CREDA shall have all rights to deduct such claims of payments from SI in case of complaints of such violations.

22. CERTIFICATES NOT TO AFFECT RIGHTS OF CREDA-

The issuance of any certificate by CREDA or any extension of time granted by CREDA shall not prejudice the rights of CREDA in terms of the contract nor shall they relieve the eligible SI of his obligations for due performance of the contract.

23. SETTLEMENT OF DISPUTES THROUGH ARBITRATION-

a. Except as otherwise specifically provided in the contract, all disputes concerning questions of fact arising under the contract shall be decided by the Chief Executive Officer (CEO), CREDA provided a written appeal by the eligible SI is made to CREDA. The decision of the CEO, CREDA shall be final and binding to the all concerns.

b. Any dispute or difference including those considered as such by only of the parties arising out of or in connection with the contract shall be to the extent possible be settled amicably between the parties. If amicable settlement cannot be reached then all disputed issues shall be settled by arbitration at Chhattisgarh.

24. LAWS GOVERNING CONTRACT-

The contract shall be constituted according to and subject to the Laws of India and jurisdiction of the High Court of Bilaspur, Chhattisgarh.

25. LANGUAGE AND MEASURES-

All documents pertaining to the Contract including specifications, schedules, notice correspondences, operating and maintenance instructions, drawings or any other writings shall be written in English/Hindi language. The metric system of measurement shall be used in this contract.

26. CORRESPONDENCE-

a. Any notice to the eligible SI under the terms of the contract shall be served by registered mail to the registered office of the eligible SI or by hand to the authorized local representative of the eligible SI and copy by post to the eligible SI's principal place of business.

b. Any notice to CREDA shall be served to the Chief Engineer, CREDA Raipur in the same manner.

27. SECRECY-

The eligible SI shall treat the details of the specifications and other documents as private and confidential and they shall not be reproduced without written authorization from CREDA.

28. AGREEMENT-

The successful eligible SI shall have to enter into an agreement with the CREDA in the approved contract agreement form within **10 days** of the receipt of call from CREDA.

29. DECLARATION OF CONFLICT OF INTEREST-

a. Any regular employee working or worked on basis of contract or through placement agency cannot work directly or indirectly in any scheme of CREDA. If such a person is found working with any SI or through sublet then, such SI shall be blacklisted up to three years.

b. The bidder shall not be permitted to Bid for this Tender, if any relative of bidder is employee of CREDA working as regular employee or work on the basis of contract or through placement agency.

Note: - By the term near relatives are meant Wife, Husband, Parents and son, Brother, Sister, Brother-in-law, Father-in-law, and Mother-in-law etc.

c. Bidder must produce an affidavit **(Annexure – II)** stating the names of retired/removed employee of CREDA (if any) in his employment who retired /removed within last two years, if in case there is no such person in his employment, his affidavit should clearly state this fact. This affidavit is mandatory, if it is not produced along with the bid, the bid shall be rejected.

30. BID EVALUATION CRITERIA-

a. Offers of only those parties, who are found qualified based on Eligibility Criteria and Technical Bid, will be taken into further consideration and financial bid of only those parties who are qualifying the criteria of Technical Bid will be opened.

b. Other things being equal, the lowest rate of total project cost shall normally be preferred, but CREDA shall have rights and liberty to amend/lower the rates.

c. Conditional Bids shall not be accepted.

d. CREDA shall have rights and liberty to call any /other parties who are technically qualified but not accepted to work on approved rates, as and when required in accordance with quantum of work and scheduled time limits for completion of targets.

31. EVALUATION OF PRICE BID AND DITERMINATION OF L1-

The Price bid of only those bidders who are technically and commercially responsive shall be considered of financial evaluation. Since the present tender is a composite turnkey package, L1 shall be determining of the basis of the lowest evaluated Total project cost of the complete BOQ.

The Evaluated Bid Price shall be calculated as:

Evaluated Bid Price =∑(Quoted Rate for each BOQ item)

The quoted rate shall be exclusive of GST, and GST shall not be considered for comparative evaluation.

L1 shall mean the technically responsive bidder having the lowest evaluated Total Project Cost of the complete tender quantity. Item-wise lowest rate shall not, by themselves, constitute L1.

In case of any discrepancy between the detailed price breakup submitted separately and rate quoted in the online e-Price Bid, the rates quoted in the online e-Price Bid shall prevail for financial evaluation, subject to applicable procurement rules.

CREDA may, after determination of L1, negotiate with the L1 bidder is accordance with the applicable procurement rules and tender conditions.

L1 FORMULA FOR THIS TENDER

Evaluated Bid Price = R (60kWp x 01) + R (15 kWp x 01) + R (12 kWp x 01) + R (10 kWp x 01) +R (07 kWp x 02) + R (05 kWp x 03) + R (04kWp x 01) + R (03 kWp x 03) + R (02 kWp x 02) + R (Solar Drinking Water Pump cap. minimum 900Wp/1.0 HP DC Submersible 06 meter staging 5000 liter tank x 01)
Where R is the Quoted rates for the respective system.

32. ALLOCATION OF WORK–

Work shall be awarded to L1 Bidder and if required, CREDA reserves the right to negotiate with Lowest Rate "L1" bidder before finalization of the rates. CREDA reserves all rights for allocation of works and the decision of CEO, CREDA shall be final and binding. Review of the progress of installation of System allocated to bidder shall be done time to time by CREDA and if the progress of installation is found unsatisfactory the appropriate action including penal action shall be taken by CREDA including blacklisting for up to three years.

33. BID REJECTION-

If financial bid of a bidder has been opened on the basis of technical bid of a bidder which has been determined to be substantially responsive to the bidding document and in latter stage it is found that

bidder does not meet the eligibility criteria or the technical bid is found substantially non-responsive, CREDA reserves rights to reject such bid of a bidder anytime.
We (on behalf of Eligible SI/Bidder) have read all the above stated details & accept to comply with it in total.

(Name, Signature & Seal of the SI)

SECTION – 3
SCOPE OF WORK

The scope of work in brief will be as follows-

1. Survey of site, designing, supply, installation & commissioning of Grid connected SPV Power Plant and Solar Drinking Water Pumps as per site specific design and specifications approved by CREDA, on turnkey basis. Bidder shall have to take approval of the engineering documents, Bill of Materials and samples from CREDA prior to commencement of the work. Five years Onsite warrantee for manufacturing defects shall be required for each of the system after successful commissioning and proper handing over.
2. The scope of work shall also include the followings:

a) Survey of Sites, Submission of site clearance certificate (in the prescribed format) where the Grid connected SPV Power Plant and Solar Drinking Water Pumps are proposed to be installed. A layout plan of the site should also be submitted clearly indicating the identified location for installation of SPV Modules, Structures and other components are proposed to be installed. Work order shall be issued only after receipt of satisfactory reports regarding suitability of system installation. Bidder shall furnish all necessary information to beneficiary for Grid connected SPV Power Plant and Solar Drinking Water Pumps Warrantee, Do & Don'ts etc. So as to avoid further misunderstandings and disputes. Brief details of site specific works are as bellow:-

b) Design, supply, installation & successful commissioning of grid connected SPV Power Plant systems (with Synchronization) and Solar Drinking Water Pumps as per requirement of the site.

c) Detailed planning of time bound smooth execution of project.

d) Design, supply, installation & commissioning of Grid connected SPV Power Plant and Solar Drinking Water Pumps of required capacities as per design and specifications approved by CREDA, on turnkey basis.

e) Get technical and safety clearances of proposed Grid Connected Roof Top SPVPP from the concerned CSPDCL office.

f) Co-ordinate with beneficiary to get connectivity approval from CSPDCL and to synchronize the system with Grid in presence of CSPDCL and Concerned Officials.

g) Providing User Manuals and Warrantee Cards to beneficiary / CREDA.

h) Bidder shall have to submit JCCs within 15 days of Installation and Commissioning of grid connected SPV Power Plant systems (with synchronization) and Solar Drinking Water Pumps in District Office of CREDA.

i) Onsite warrantee for manufacturing defects for Five years faultless operation, assure inventory for maintenance.

j) Providing Prompt Service Facilities to customers/ beneficiaries.

k) Risk liability of all personnel associated with implementation and realization of the project.

l) Training of at least two persons nominated by user, on the various aspects of design and maintenance of the offered system after commissioning of the system.

m) The eligible bidder shall maintain sufficient inventory of the spares to ensure that the system can be made functional within 7 days from the communication of breakdown of the system during currency of the warrantee period.

n) The bidder shall run the system on trial basis and shall closely monitor the performance of the system before handing over the system, so that the assured annual power generation can be estimated for monitoring of the performance of the system. CREDA shall examine the data of generation and ascertain if the generation is adequate with reference to the capacity of the SPV Systems.

o) Performance Guarantee Test: Successful performance guarantee test to demonstrate the rated capacity of Grid connected SPV Power Plant and Solar Drinking Water Pumps as per CREDA's norms shall have to be conducted by bidder in presence of representatives of

Item -01:- Proposed Sites for Grid connected solar power plant:-

Sr	Site Name	Lattitude & Longitude	Type of Project)	RE Technology Proposed	QTY	Capacity
1	Kendriya Vidhiyalay	21.975691& 82.574516	Community Infrastructure	Solar Power Plant On Grid	1	60 kWp
2	Superitendent Jail	21.982617 & 82.574055	Community Infrastructure	Solar Power Plant On Grid	1	15 kWp
3	Superitendent Jila Jail	21.981644 & 82.574361	Community Infrastructure	Solar Power Plant On Grid	1	7 kWp
4	Sahayak Jail Adhikshak Jila Jail	21.981644 & 82.574306	Community Infrastructure	Solar Power Plant On Grid	1	5 kWp
5	The Superitendent Jila Jail Janjgir	21.981887 & 82.574598	Community Infrastructure	Solar Power Plant On Grid	1	5 kWp
6	Swami Atamanand School No. 02	21.979873 & 82.576195	Community Infrastructure	Solar Power Plant On Grid	1	7 kWp
7	Post. Met. SC Boys Hostel	21.980501 & 82.575596	Community Infrastructure	Solar Power Plant On Grid	1	10 kWp
8	Nagar Senani Office - Khokhra Police Line	21.982467 & 82.573292	Community Infrastructure	Solar Power Plant On Grid	1	2 kWp
9	Police Rakshit Kendra - Main Road Khokhra Police Line	21.984524 & 82.575397	Community Infrastructure	Solar Power Plant On Grid	1	3 kWp
10	Govt. T.C.L. P.G.GOVT. Colleges	21.984374 & 82.578583	Community Infrastructure	Solar Power Plant On Grid	1	12 kWp
11	Pracharya Adhichhika T.C.L. GOVT. Colleges	21.984397 & 82.578596	Community Infrastructure	Solar Power Plant On Grid	1	4 kWp
12	Krishi Upaj Mandi	21.987468 & 82.580897	Community Infrastructure	Solar Power Plant On Grid	1	5 kWp
13	Nap-tol Office	21.987637 & 82.580683	Community Infrastructure	Solar Power Plant On Grid	1	2 kWp
14	Govt. Higher Sec. School	21.976335 & 82.565733	Community Infrastructure	Solar Power Plant On Grid	1	3 kWp
15	Govt. Purv Ma. High School	21.976652 & 82.565394	Community Infrastructure	Solar Power Plant On Grid	1	3 kWp
	Total					**143kWp**

Item -02:- Proposed Sites for Solar Drinking Water Pump:-

Sr	Site Name	Latitude & Longitude	Type of Project	RE Technology Proposed	QTY	Capacity
1	Thakur Dev Mandir Ke Pass	21.971168 & 82.574201	Community Infrastructure	Solar Drinking Water Pump	1	1HP / 900W / 5000ltr

SECTION – 4

TECHNICAL SPECIFICATIONS OF ON GRID ROOF TOP SOLAR POWER PLANT

The proposed projects shall be commissioned as per following technical specifications.

A Roof Top Solar (RTS) Photo Voltaic (PV) system shall be installed on rooftops/terraces/balcony/Building Integrated Photovoltaic (BIPV) or on elevated structures. In case of installation on an elevated structure, the structure as per details below. The RTS system shall consist of the following:

1. Solar Photo Voltaic (SPV) modules consisting of required number of SPV modules
2. Inverter/PCU
3. Module Mounting structures
4. Net Meter/Smart Meter
5. Array Junction Boxes
6. DC Distribution Box
7. AC Distribution Box
8. Protections – Earthing, Lightning, Surge
9. Cables
10. Drawing & Manuals
11. Miscellaneous.

Components/Package of Grid Connected Rooftop Solar PV System: The components of a Grid Connected Rooftop Solar PV System shall essentially comprise but not be limited to solar PV Panels/modules of required number, Inverters/PCU, module mounting structures of minimum 600mm ground clearance at the lowest point from the roof surface, total Cable/wiring of suitable length, cable conduits, required array junction boxes, DC distribution box, AC distribution box, various connectors, nut- bolts, civil and mechanical works, Protection-Earthing, lightning, surges, drawling & manual, 05 years of comprehensive operation & maintenance of grid-connected rooftop solar PV plant and other miscellaneous works.

1. Solar PV modules

1.1. Domestic Manufactured Solar PV modules using domestically manufactured Solar cells shall be used.

1.2. The PV modules used must qualify to the latest edition of IEC standards or equivalent BIS standards, i.e. IEC 61215/IS 14286, IEC 61853-Part I or IS 16170-Part I, IS/IEC 61730 Part-1 & Part 2 and IS 17210(part 1) or IEC 62804-1 (PID). For the PV modules to be used in a highly corrosive atmosphere throughout their lifetime, they must qualify to IEC 61701/IS 61701. Thin - Film terrestrial photovoltaic (PV) modules must qualify to IS 16077: 2013 / IEC 61646: 2008

1.3. The rated power of solar PV module shall have maximum tolerance up to +3%.

1.4. The peak-power point current of any supplied module string (series connected modules) shall not vary by +1% from the respective arithmetic means for all modules and/or for all module strings (connected to the same MPPT), as the case may be.

1.5. The peak-power point voltage of any supplied module string (series connected modules) shall not vary by + 2% from the respective arithmetic means for all modules and/or for all module strings (connected to the same MPPT), as the case may be.

1.6. The temperature co-efficient power of the PV module shall be equal to or better than -0.4%/°C for crystalline modules and -0.3 %/°C for thin films modules.

1.7. Solar PV modules capacity to be used should adhere to the Approved List of Models and Manufacturers (ALMM) of Solar Photovoltaic Modules (Requirement for Compulsory Registration) Order 2019 - Implementation issued vide OM NO. 283/54/2018-GRID SOLAR -Part (I) Dated 10th March 2021, 283/41/2024-GRID SOLAR Dated 03-08-2026, 283/51/2025-GRID SOLAR Dated 21-08-2026 and subsequent amendments.

1.8. Solar PV modules of minimum fill factor 75%, to be used.

1.9. All PV modules should have a nominal power output of >90% at STC during the first 10 years, and >80% during the next 15 years. Further, module shall have nominal power output of >97% during the first year of installation—degradation of the module below 0.5 % per annum

1.10. The manufacturer should warrant the Solar Module(s) to be free from the defects and/or failures specified below for a period not less than five (5) years from the date of commissioning.
i. Defects and/or failures due to manufacturing.

ii. Defects and/or failures due to quality of materials.

iii. Nonconformity to specifications due to faulty manufacturing and/or inspection processes. If the solar Module(s) fails to conform to this warranty, the manufacturer will repair or replace the solar module(s), at the Owners sole option. The PV modules shall be replaced by manufacturers, without charging any cost to the end consumer during the specified period of warranty.

1.11. Modules deployed must use a RF identification tag laminated inside the glass. The following information must be mentioned in the RFID used on each module:

i. Name of the manufacturer of the PV module

ii. Name of the manufacturer of Solar Cells.

iii. Month & year of the manufacture (separate for solar cells and modules)

iv. Country of origin (separately for solar cells and module)

v. I-V curve for the module Wattage, Im, Vm and FF for the module

vi. Unique Serial No and Model No of the module

vii. Date and year of obtaining IEC PV module qualification certificate.

viii. Name of the test lab issuing IEC certificate.

ix. Other relevant information on traceability of solar cells and module as per ISO 9001 and ISO 14001.

x. Nominal wattage +3%.

xi. Name, if applicable.

1.12. Other details as per IS/IEC 61730-1 clause 11 should be provided at appropriate place. In addition to the above, the following information should also be provided:

i. The actual Power Output Pmax shall be mentioned on the label pasted on the back side of PV Module.

ii. The Maximum system voltage for which the module is suitable to be provided on the back sheet of the module.

iii. Polarity of terminals or leads (colour coding is permissible) on junction Box housing near cable entry or cable and connector.

1.13. Unique Serial No, Model No, Name of Manufacturer, Manufacturing year, Make in India logo and module wattage details should be displayed inside the laminated glass.

2. Inverter/PCU

2.1 The Solar Photovoltaic Inverters must comply with the MNRE Quality Control Order dated 30.08.2017 for Solar Photovoltaic Inverters and its amendments thereof.

2.2 Inverters/PCU should comply with applicable IEC/equivalent BIS standard for efficiency measurements and environmental tests as per standard codes IS 16221 (Part 2): 2015, IS 16169: 2019 and 17980:2022

2.3 Equivalent BIS Std.

2.4 Maximum Power Point Tracker (MPPT) shall be integrated in the inverter/PCU to maximize energy drawn from the array. Charge controller (if any) / MPPT units environmental testing should qualify IEC 60068-2(1, 2, 14, 30)/Equivalent BIS standard. The junction boxes/enclosures should be IP 65 or better (for outdoor)/ IP 54or better (indoor) and as per IEC 529 Specifications.

2.5 All inverters/PCUs shall be IEC 61000 compliant for electromagnetic compatibility, harmonics, Surge, etc.

2.6 The PCU/ inverter shall have overloading capacity of minimum 20%.

2.7 Typical technical features of the inverter shall be as follows-
i. Nominal AC output voltage and frequency: as per CEA/State regulations

ii. Output frequency: 50 Hz

iii. Grid Frequency Synchronization range: as per CEA/State Regulations

iv. Ambient temperature considered: -20°C to 60°C

v. Protection of Enclosure: IP-54 (Minimum) for indoor and IP-65(Minimum) for outdoor.

vi. Grid Frequency Tolerance range: as per CEA/State regulations

vii. Grid Voltage tolerance: as per CEA/State Regulations

viii. No-load losses: Less than 1% of rated power

ix. Inverter efficiency (Min.): >90% (In case of 10 kW or below with in-built galvanic isolation)

x. The Minimum Overall Efficiency (ηt) as per IS 17980 for Solar Inverters should adhere to the following:

xi. THD: < 3%

xii. PF: > 0.9 (lag or lead)

xiii. Should not inject DC power more than 0.5% of full rated output at the interconnection point and comply to IEEE 519.

xiv. The inverter should have the inbuilt facility to communicate system related data through SIM/dongle. The inverter may also be enabled for Wi-Fi based communication.

2.8 All the Inverters should contain the following clear and indelible Marking Label & Warning Label as per IS16221 Part II, clause 5. The equipment shall, as a minimum, be permanently marked with:
i. The name or trademark of the manufacturer or supplier;

ii. A model number, name or other means to identify the equipment,
iii. A serial number, code or other marking allowing identification of manufacturing location and the manufacturing batch or date within a twelve- month time period.

iv. Input voltage, type of voltage (a.c. or d.c.), frequency, and maximum continuous current for each input.

v. The Ingress Protection (IP) rating

2.9 In case the consumer is having a 3-ϕ connection, 1-ϕ/3-ϕ inverter shall be provided by the vendor as per the consumer's requirement and regulations of the State.

2.10 Inverter/PCU shall be capable of complete automatic operation including wake-up, synchronization & shutdown.

2.11 Integration of PV Power with Grid & Grid Islanding:
i. In the event of a power failure on the electric grid, it is required that any independent power-producing inverters attached to the grid turn off in a short period of time. This prevents the DC-to-AC inverters from continuing to feed power into small sections of the grid, known as "islands." Powered islands present a risk to workers who may expect the area to be unpowered, and they may also damage grid-tied equipment. The Rooftop PV system shall be equipped with islanding protection. In addition to disconnection from the grid (due to islanding protection) disconnection due to under and over voltage conditions shall also be provided, if not available in inverter.

3. Module Mounting Structure (MMS):

3.1 Supply, installation, erection and acceptance of module mounting structure (MMS) with all necessary accessories, auxiliaries and spare part shall be in the scope of the work.

3.2 Module mounting structures can be made from three types of materials. They are Hot Dip Galvanized Iron, Aluminium and Hot Dip Galvanized Mild Steel (MS). However, MS will be preferred for raised structure.

3.3 MMS Steel shall be as per latest IS 2062:2011 and galvanization of the mounting structure shall be in compliance of latest IS 4759. MMS Aluminium shall be as per AA6063 T6. For Aluminium structures, necessary protection towards rusting needs to be provided either by coating or anodization.

3.4 All bolts, nuts, fasteners shall be of stainless steel of grade SS 304 or hot dip galvanized, panel mounting clamps shall be of aluminium and must sustain the adverse climatic conditions. Structural material shall be corrosion resistant and electrolytically compatible with the materials used in the module frame, its fasteners, nuts and bolts.

3.5 The module mounting structures should have angle of inclination as per the site conditions to take maximum insolation and complete shadow-free operation during generation hours. However, to accommodate more capacity the angle of inclination may be reduced until the plant meets the specified performance ratio requirements.

3.6 The Mounting structure shall be so designed to withstand the speed for the wind zone of the location where a PV system is proposed to be installed. The PV array structure design shall be appropriate with a factor of safety of minimum 1.5.

3.7 The upper edge of the module must be covered with wind shield so as to avoid build air ingress below the module. Slight clearance must be provided on both edges (upper & lower) to allow air for cooling.

3.8 Suitable fastening arrangement such as grouting and calming should be provided to secure the installation against the specific wind speed. The Empanelled Agency shall be fully responsible for any damages to SPV System caused due to high wind velocity within guarantee period as per technical specification.

3.9 The structures shall be designed to allow easy replacement, repairing and cleaning of any module. The array structure shall be so designed that it will occupy minimum space without sacrificing the output from the SPV panels. Necessary testing provision for MMS to be made available at site.

3.10 Adequate spacing shall be provided between two panel frames and rows of panels to facilitate personnel protection, ease of installation, replacement, cleaning of panels and electrical maintenance.

3.11 The structure shall be designed to withstand operating environmental conditions for a period of minimum 25 years.

3.12 The Rooftop Structures maybe classified in three broad categories as follows:

i. **Ballast structure**

a. The mounting structure must be Non-invasive ballast type and any sort of penetration of roof to be avoided.

b. The minimum clearance of the structure from the roof level should be in between 70-150 mm to allow ventilation for cooling, also ease of cleaning and maintenance of panels as well as cleaning of terrace.

c. The structures should be suitably loaded with reinforced concrete blocks of appropriate weight made out of M25 concrete mixture.

ii. **Tin shed**

a. The structure design should be as per the slope of the tin shed.

b. The inclination angle of structure can be done in two ways-

c. Parallel to the tin shed (flat keeping zero-degree tiling angle), if the slope of shed in Proper south direction

d. With same tilt angle based on the slope of tin shed to get the maximum output.

e. The minimum clearance of the lowest point from the tin shade should be more then 100mm.

f. The base of structure should be connected on the Purlin of tin shed with the proper riveting.

g. All structure member should be of minimum 2 mm thickness.

iii. **RCC Elevated structure**: It can be divided into further three categories:

A Minimum clearance from roof (upto 1000 MM)

a. The structure shall be designed to allow easy replacement of any module and shall be in line with site requirement. The gap between module should be minimum 30MM.

b. Base Plate – Base plate thickness of the Structure should be 5MM for this segment.

c. Column – Structure Column should be minimum 2MM in Lip section / 3MM in C-Channel section. The minimum section should be 70MM in Web side and 40 MM in flange side in Lip section.

d. Rafter - Structure rafter should be minimum 2MM in Lip section / 3MM in C-Channel section. The minimum section should be 70MM in Web side (y- axis) and 40 MM in flange side (x-axis).

e. Purlin - Structure purlin should be minimum 2MM in Lip section. The minimum section should be 60MM in Web side and 40MM in flange side in Lip section.

f. Front/back bracing – The section for bracing part should be minimum 2MM thickness.

g. Connection – The structure connection should be bolted completely. Leg to rafter should be connected with minimum 12 diameter bolt. Rafter and purlin should be connected with minimum 10 diameter bolt. Module mounting fasteners should be SS-304 only and remaining fasteners either SS-304 or HDG 8.8 Grade.

h. For single portrait structure the minimum ground clearance should be 500MM.

B Medium clearance from roof (1000MM – 2000 MM)

a. Base Plate – Base plate thickness of the Structure should be Minimum 6MM for this segment.

b. Column – Structure Column should be minimum 2MM in Lip section / 3MM in C-Channel section. The minimum section should be 80MM in Web side and 50MM in flange side in Lip section.

c. Rafter - Structure rafter should be minimum 2MM in Lip section / 3MM in C-Channel section. The minimum section should be 70MM in Web side and 40MM in flange side in Lip section.

d. Purlin - Structure Purlin should be minimum 2MM in Lip section. The minimum section should be 70MM in Web side and 40MM in flange side in Lip section.

e. Front/back bracing – The section for bracing part should be minimum 2MM thickness.

f. Connection – The structure connection should be bolted completely. Leg to rafter should be connected with minimum 12 diameter bolt. Rafter and Purlin should be connected with minimum 10 diameter bolt. Module mounting fasteners should be SS-304 only and remaining fasteners either SS-304 or HDG 8.8 Grade.

C Maximum clearance from roof (2000MM – 3000 MM)

a. Base Plate – Base plate thickness of the Structure should be minimum 8 MM for this segment.
b. Column – Structure Column thickness should be minimum 2.6MM in square hollow section (minimum 50x50) or rectangular hollow section (minimum 60x40) or 3MM in C-Channel section.
c. Rafter - Structure rafter should be minimum 2MM in Lip section / 3MM in Channel section. The minimum section should be 80MM in Web side and 50MM in flange side in Lip section.

d. Purlin - Structure Purlin should be minimum 2MM in Lip section. The minimum section should be 80MM in Web side and 50MM in flange side in Lip section.
e. Front/back bracing – The section for bracing part should be minimum 3MM thickness.
f. Connection – The structure connection should be bolted completely. Leg to rafter should be connected with minimum 12 diameter bolt. Rafter and Purlin should be connected with minimum 10 diameter bolt. Module mounting fasteners should be SS-304 only and remaining fasteners either SS-304 or HDG 8.8 Grade.

D Super elevated structure (More than 3000 MM clearance from roof)

A. Base structure

a. Base Plate – Base plate thickness of the Structure should be 10MM for this segment.
b. Column – Structure Column minimum thickness should be minimum 2.9MM in square hollow section (minimum 60x60) or rectangular hollow section (minimum 80x40).
c. Rafter - Structure Rafter minimum thickness should be minimum 2.9MM in square hollow section (minimum 60x60) or rectangular hollow section (minimum 80x40).
d. Cross bracing – Bracing for the connection of rafter and column should be of minimum thickness of 4mm L-angle with the help of minimum bolt diameter of 10mm.

B. Upper structure of super elevated structure –

a. Base Plate – Base plate thickness of the Structure should be minimum 5MM for this segment.
b. Column – Structure Column should be minimum 2MM in Lip section / 3MM in Channel section. The minimum section should be 70MM in Web side and 40MM in flange side in Lip section.
c. Rafter - Structure rafter should be minimum 2MM in Lip section / 3MM in Channel section. The minimum section should be 70MM in Web side and 40MM in flange side in Lip section.
d. Purlin - Structure purlin should be minimum 2MM in Lip section. The minimum section should be 60MM in Web side and 40MM in flange side in Lip section.
e. Front/back bracing – The section for bracing part should be minimum 2MM thickness.
f. Connection – The structure connection should be bolted completely. Leg to rafter should be connected with minimum 12 diameter bolt. Rafter and
g. purlin should be connected with minimum 10 diameter bolt. Module mounting fasteners should be SS-304 only and remaining fasteners either SS-304 or HDG 8.8 Grade.

C. If distance between two legs in X-Direction is more than 3M than sag angle/Bar should be provide for purlin to avoid deflection failure. The sag angle should be minimum 2MM thick, and bar should be minimum 12Dia.

D. Degree - The Module alignment and tilt angle shell be calculated to provide the maximum annual energy output. This shall be decided on the location of array installation.

E. Foundation – Foundation should be as per the roof condition; two types of the foundation can be done- either penetrating the roof or without penetrating the roof.

a. If penetration on the roof is allowed (based on the client requirement) then minimum 12MM diameter anchor fasteners with minimum length 100MM can be used with proper chipping. The minimum RCC size should be 400x400x300 cubic mm. Material grade of foundation should be minimum M20.
b. If penetration on roof is not allowed, then foundation can be done with the help of 'J Bolt' (refer IS 5624 for foundation hardware). Proper Neto bond solution should be used to adhere the Foundation block with the RCC roof. Foundation J - bolt length should be minimum 12MM diameter and length should be minimum 300MM.

F. Material standards:
a. Design of foundation for mounting the structure should be as per defined standards which clearly states the Load Bearing Capacity & other relevant parameters for foundation design (As per IS 6403 / 456 / 4091 / 875).
b. Grade of raw material to be used for mounting the structures so that it complies the defined wind loading conditions (As per IS 875 - III) should be referred as follows (IS 2062 – for angles and channels, IS 1079 – for sheet, IS 1161 & 1239 for round pipes, IS 4923 for rectangular and square hollow section)
c. Test reports for the raw material should be as per IS 1852 / 808 / 2062 / 1079 / 811.
d. In process inspection report as per approved drawing & tolerance should be as per IS 7215.
e. For ascertaining proper welding of structure part following should be referred:
f. D.P. Test (Pin Hole / Crack) (IS 822)
g. Weld wire grade should be of grade (ER 70 S - 6)
h. For ascertaining hot dip galvanizing of fabricated structure following should be referred:
i. Min coating required should be as per IS 4759 & EN 1461.
j. Testing of galvanized material
a) Pierce Test (IS 2633)
b) Mass of Zinc (IS 6745)
c) Adhesion Test (IS 2629)
d) CuSO4 Test (IS 2633)
e) Superior High-Grade Zinc Ingot should be of 99.999% purity (IS 209) (Preferably Hindustan Zinc Limited or Equivalent).
k. Foundation Hardware – If using foundation bolt in foundation then it should be as per IS 5624.

4. Metering
4.1 The specifications net meter/smart meter shall be as per the latest technical specifications issued by the Central Electricity Authority (CEA) and its amendment thereof.
4.2 A Roof Top Solar (RTS) Photo Voltaic (PV) system shall consist of following energy meters:
a) Net meter/ smart meter: To record import and export units.

b) Generation meter (if required as per the state regulations: To keep record for total generation of the plant.
4.3 The installation of meters including CTs & PTs, wherever applicable, shall be carried out by the respective DISCOMS as per the terms, conditions and procedures laid down by the concerned CSERCs/DISCOMs.

5. Array Junction Boxes
5.1 The junction boxes are to be provided in the PV array for termination of connecting cables. The Junction Boxes (JBs) shall be made of GRP/FRP/Powder Coated aluminium /cast aluminium alloy with full dust, water & vermin proof arrangement. All wires/cables must be terminated through cable lugs. The JBs shall be such that input & output termination can be made through suitable cable glands. Suitable markings shall be provided on the bus-bars for easy identification and cable ferrules will be fitted at the cable termination points for identification.

5.2 Copper bus bars/terminal blocks housed in the junction box with suitable termination threads Conforming to IP 65 or better standard and IEC 62208 Hinged door with EPDM rubber gasket to prevent water entry, Single /double compression cable glands should be provided.

5.3 Polyamide glands and MC4 Connectors may also be provided. The rating of the junction box shall be suitable with adequate safety factor to interconnect the Solar PV array.

5.4 Suitable markings shall be provided on the bus bar for easy identification and the cable ferrules must be fitted at the cable termination points for identification.

5.5 Junction boxes shall be mounted on the MMS such that they are easily accessible and are protected from direct sunlight and harsh weather.

6. DC Distribution Box (DCDB)

6.1 May not be required for small plants, if suitable arrangement is available in the inverter.

6.2 DC Distribution Box are to be provided to receive the DC output from the PV array field.

6.3 DCDBs shall be dust & vermin proof conform having IP 65 or better protection, as per site conditions.

6.4 The bus bars are made of EC grade copper of required size. Suitable capacity MCBs/MCCB shall be provided for controlling the DC power output to the inverter along with necessary surge arrestors. MCB shall be used for currents up to 63 Amperes, and MCCB shall be used for currents greater than 63 Amperes.

7. AC Distribution Box (ACDB)

7.1 AC Distribution Panel Board (DPB) shall control the AC power from inverter, and should have necessary surge arrestors, if required. There is interconnection from ACDB to mains at LT Bus bar while in grid tied mode.

7.2 All switches and the circuit breakers, connectors should conform to IEC 60947:2019, part I, II and III/ IS 60947 part I, II and III.

7.3 The isolators, cabling work should be undertaken as part of the project.

7.4 All the Panel's shall be metal clad, totally enclosed, rigid, floor mounted, air -insulated, cubical type suitable for operation on 1-ϕ/3-ϕ, 415 or 230 volts, 50 Hz (or voltage levels as per CEA/State regulations).

7.5 The panels shall be designed for minimum expected ambient temperature of 45 degree Celsius, 80 percent humidity and dusty weather.

7.6 All indoor panels will have protection of IP 54 or better, as per site conditions. All outdoor panels will have protection of IP 65 or better, as per site conditions.

7.7 Should conform to Indian Electricity Act and CEA safety regulations (till last amendment).

7.8 All the 415 or 230 volts (or voltage levels as per CEA/State regulations) AC devices / equipment like bus support insulators, circuit breakers, SPDs, Voltage Transformers (VTs) etc., mounted inside the switchgear shall be suitable for continuous operation and satisfactory performance under the following supply conditions.

a. Variation in supply voltage: as per CEA/State regulations

b. Variation in supply frequency: as per CEA/State regulations

7.9 The inverter output shall have the necessary rated AC surge arrestors, if required and MCB/ MCCB. RCCB shall be used for successful operation of the PV system, if inverter does not have required earth fault/residual current protection.

8. Protections

The system should be provided with all necessary protections like earthing, Lightning, and Surge Protection, as described below:

8.1 **Earthing Protection**

8.1.1 The earthing shall be done in accordance with latest Standards.

8.1.2 Each array structure of the PV yard, Low Tension (LT) power system, earthing grid for switchyard, all electrical equipment, inverter, all junction boxes, etc. shall be grounded properly as per IS 3043-2018.

8.1.3 All metal casing/ shielding of the plant shall be thoroughly grounded in accordance with CEA Safety Regulation 2010. In addition, the lightning arrester/masts should also be earthed inside the array field.

8.1.4 Earth resistance should be as low as possible and shall never be higher than 5 ohms.

8.1.5 For 10 KW and above systems, separate three earth pits shall be provided for individual three earthing viz.: DC side earthing, AC side earthing and lightning arrestor earthing.

8.2 **Lightning Protection**

8.2.1 The SPV power plants shall be provided with lightning & over voltage protection, if required. The main aim in this protection shall be to reduce the overvoltage to a tolerable value before it reaches the PV or other sub system components. The source of over voltage can be lightning, atmosphere disturbances etc. Lightning arrestor shall not be installed on the mounting structure.

8.2.2 The entire space occupying the SPV array shall be suitably protected against Lightning by deploying required number of Lightning Arrestors (LAs). Lightning protection should be provided as per NFC17-102:2011/IEC 62305 standard.

8.2.3 The protection against induced high-voltages shall be provided by the use of Metal Oxide Varistors (MOVs)/Franklin Rod type LA/Early streamer type LA.

8.2.4 The current carrying cable from lightning arrestor to the earth pit should have sufficient current carrying capacity according to IEC 62305. According to standard, the minimum requirement for a lightning protection system designed for class of LPS III is a 6 mm2 copper/ 16 mm2 aluminium or GI strip bearing size 25*3 mm thick). Separate pipe for running earth wires of Lightning Arrestor shall be used.

8.3 **Surge Protection**

8.3.1 Internal surge protection, wherever required, shall be provided. It will consist of three SPD type-II/MOV type surge arrestors connected from +ve and –ve terminals to earth.

9. Cables

9.1 All cables should conform to latest edition of IEC/equivalent BIS Standards along with IEC 60227/IS 694, IEC 60502/IS 1554 standards.

9.2 Cables should be flexible and should have good resistance to heat, cold, water, oil, abrasion etc.

9.3 Armoured cable should be used and overall PVC type ‘A’ pressure extruded insulation or XLPE insulation should be there for UV protection.

9.4 Cables should have Multi Strand, annealed high conductivity copper conductor on DC side and copper/FRLS type Aluminium conductor on AC side. For DC cabling, multi- core cables shall not be used.

9.5 Cables should have operating temperature range of -10°C to +80°C and voltage rating of 660/1000 V.

9.6 Sizes of cables between array interconnections, array to junction boxes, junction boxes to Inverter etc. shall be so selected to keep the voltage drop less than 2% (DC Cable losses).

9.7 The size of each type of AC cable selected shall be based on minimum voltage drop. However; the maximum drop shall be limited to 2%.

9.8 The electric cables for DC systems for rated voltage of 1500 V shall conform to IS 17293:2020.

9.9 All cable/wires are to be routed in a RPVC pipe/ GI cable tray and suitably tagged and marked with proper manner by good quality ferule or by other means so that the cable is easily identified.

9.10 All cable trays including covers to be provided.

9.11 Thermo-plastic clamps to be used to clamp the cables and conduits, at intervals not exceeding 50 cm.

9.12 Size of neutral wire shall be equal to the size of phase wires, in a three phase system.

9.13 The Cable should be so selected that it should be compatible up to the life of the solar PV panels i.e. 25 years.

10. Drawings & Manuals:

10.1 Operation & Maintenance manual/user manual, Engineering and Electrical Drawings shall be supplied along with the power plant.

10.2 The manual shall include complete system details such as array lay out, schematic of the system, inverter details, working principle etc.

10.3 The Manual should also include all the Dos & Don'ts of Power Plant along with Graphical Representation with indication of proper methodology for cleaning, Operation and Maintenance etc.
10.4 Step by step maintenance and troubleshooting procedures shall also be given in the manuals.

10.5 Vendors should also educate the consumers during their AMC period.

11. Miscellaneous:

11.1 Connectivity: The maximum capacity for interconnection with the grid at a specific voltage level shall be as specified in the SERC regulation for Grid connectivity and norms of DISCOM and amended from time to time.
11.2 Safety measures: Electrical safety of the installation(s) including connectivity with the grid must be taken into account and all the safety rules & regulations applicable as per Electricity Act,

2003 and CEA Safety Regulation 2010 etc. must be followed. 11.3 Shadow analysis:
The shadow analysis report with the instrument such as Solar Pathfinder or professional shadow analysis software of each site should be provided and the consumer should be educated to install the system only in shadow free space. Lower performance of the system due to shadow effect shall be liable for penalty for lower performance.

Quality Certification, Standards and Testing for Grid-Connected Rooftop Solar PV Systems/Power Plants	
Solar PV Modules/Panels	
IEC 61215/ IS 14286	Design Qualification and Type Approval for Crystalline Silicon Terrestrial Photovoltaic (PV) Modules
IS/IEC 61701	Salt Mist Corrosion Testing of Photovoltaic (PV) Modules
IEC 61853- 1 / IS 16170-1	Photovoltaic (PV) module performance testing and energy rating –: Irradiance and temperature performance measurements, and power Rating.
IEC 62716/ IS 16664	Photovoltaic (PV) Modules – Ammonia (NH3) Corrosion Testing (as per the site condition like dairies, toilets etc)
IS 16077 : 2013 / IEC 61646 : 2008	Thin - Film terrestrial photovoltaic (PV) modules - Design qualification and type approval
IS/IEC 61730-1,2	Photovoltaic (PV) Module Safety Qualification – Part 1: Requirements for Construction, Part 2: Requirements for Testing
IS 17210 (part 1) or IEC TS 62804-1	Photovoltaic (PV) modules – Test method for detection of potential- induced degradation. IEC 62804-1: Part 1: Crystalline Silicon

Solar PV Inverters	
IEC 62109 or IS : 16221	Safety of power converters for use in photovoltaic power systems – Part 1: General requirements, and Safety of power converters for use in photovoltaic power systems Part 2: Particular requirements for inverters. Safety compliance (Protection degree IP 65 or better for outdoor mounting, IP 54 or better for indoor mounting)
IS/IEC 61683 latest	Photovoltaic Systems – Power conditioners: Procedure for Measuring Efficiency (10%, 25%, 50%, 75% & 90-100% Loading Conditions)
(as applicable)	
IEC 60068-2 /IEC 62093 (as applicable)	Environmental Testing of PV System – Power Conditioners and Inverters
IEC 62116:2014/ IS16169	Utility-interconnected photovoltaic inverters - Test procedure of islanding prevention measures

Fuses	
IS/IEC 60947 (Part 1, 2 & 3), EN 50521	General safety requirements for connectors, switches, circuit breakers (AC/DC): 1)Low-voltage Switchgear and Control-gear, Part 1: General rules 2)Low-Voltage Switchgear and Control-gear, Part 2: Circuit Breakers 3) Low-voltage switchgear and Control-gear, Part 3: Switches, disconnectors switch-disconnectors and fuse-combination units 4) EN 50521: Connectors for photovoltaic system-Safety requirements and tests
IS/IEC 60269-6	Low-voltage fuses - Part 6: Supplementary requirements for fuse- Links for the protection of solar photovoltaic energy systems
Solar PV Roof Mounting Structure	
IS 2062/IS 4759/ AA6063 T6	Material for the structure mounting

Surge Arrestors	
BFC 17-102:2011/ NFC 102:2011/ IEC 62305	Lightening Protection Standard
IEC 60364-5-53/ IS 15086-5 (SPD) IEC 61643- 11:2011	Electrical installations of buildings - Part 5-53: Selection and erection of electrical equipment - Isolation, switching and control Low-voltage surge protective devices - Part 11: Surge protective devices connected to low-voltage power systems - Requirements and test methods
Cables	
IEC 60227/IS 694, IEC 60502/IS 1554 (Part 1& 2)/ IEC69947 (as applicable)	General test and measuring method for PVC (Polyvinyl chloride) insulated cables (for working voltages up to and including 1100 V, and resistant for outdoor installation)
IS 17293:2020	Electric Cables for Photovoltaic Systems for Rated Voltage 1500 V DC

Earthing /Lightning	
IEC 62561/IEC 60634 Series (Chemical earthing) (as applicable)	IEC 62561-1: Lightning protection system components (LPSC) - Part: Requirements for connection components IEC 62561-2: Lightning protection system components (LPSC) – Part 2:Requirements for conductors and earth electrodes IEC 62561-7: Lightning protection system components (LPSC) - Part 7:Requirements for earthing enhancing compounds
Junction Boxes	
IEC 60529	Junction boxes and solar panel terminal boxes shall be of the thermo-plastic type with IP 65 or better protection for outdoor use, and IP 54 or better protection for indoor use

12. COMPREHENSIVE MAINTENANCE GUIDELINES OF GRID CONNECTED PV PLANTS [TO BE MANDATORILY FOLLOWED BY BIDDER]

For the optimal operation of a Grid connected SPV Power Plant and Solar Drinking Water Pumps maintenance must be carried out on a regular basis. All the components should be kept clean. It should be ensured that all the components are fastened well at their due place. Maintenance guidelines for various components viz. solar panels, inverter, wiring etc. are discussed below. The Comprehensive Maintenance of Solar Photovoltaic Power Plant would include wear, tear, overhauling, machine breakdown, insurance, and replacement of defective modules, invertors / Power Conditioning Unit (PCU) spares, consumables & other Part for a period of 5 years systems.

The bidder shall be responsible for all the required activities for successful Comprehensive maintenance of the Grid connected SPV Power Plant and Solar Drinking Water Pumps for a period of 5 years.

a. Comprehensive Maintenance of Solar Power Plant shall be compliant with grid requirements to achieve committed energy generation.
b. **Arrangement of qualified and experienced engineer/ technicians till the Comprehensive Maintenance period for projects.**
c. Periodic cleaning of solar modules.
d. Periodic checks of the Modules, PCUs and BoS shall be carried out as a Part of routine preventive and breakdown maintenance.
e. Immediate replacement of defective Modules, Invertors/PCUs and other equipment as and when required.
f. Supply of all spares, consumables and fixtures as required. Such stock shall be maintained for all associated equipments and materials as per manufacturer/ supplier's recommendations.
g. The entire equipment testing instrument required for Testing, Commissioning and Comprehensive Maintenance for the healthy operation of the Plant shall be maintained by the Bidder. The testing equipments must be calibrated once every 2 years from NABL accredited labs and the certificate of calibration must be kept for reference as required.
h. If negligence/ mal-operation on Part of the Bidder's operator results in failure of equipment, such equipment should be repaired/ replaced by the Bidder free of cost.
i. Co-ordination with Beneficiaries/DISCOM as per the requirement for Joint Metering Report (JMR). The person in charge present at site from bidder's side shall take a joint meter reading in the presence of rooftop owner on a **monthly basis**. Furnishing generation data (JMR) each month to CREDA positively by 1st week of every month for the previous month. Failure to adhere may result in non-disbursal of subsidy.
j. Online Performance Monitoring, controlling, troubleshooting, maintaining of logs & records. A maintenance record register is to be maintained by the operator with effect from Commissioning to record the daily generation on monthly basis, regular maintenance work carried out as well as any preventive and breakdown maintenance along with the date of maintenance, reasons for the breakdown, duration of the breakdown, steps taken to attend the breakdown, etc.

k. For any issues related to Comprehensive maintenance, a toll-free number shall be made available to the rooftop owner/ plant owner to **attend** within 72 hours. If not attended within such stipulated time, a complaint may be raised to CREDA, pursuant to which, a penalty of Rs. 10,000 for full month or more shall be imposed for a system capacity above 100 kW. This will be applicable till 5 years of Comprehensive Maintenance as per the Scope of the bid.
l. If any jobs covered in Comprehensive Maintenance Scope as per bid are not carried out by the Bidder during the Comprehensive Maintenance period, the Engineer-In-Charge shall take appropriate action as deemed fit. CREDA reserves the right to make surprise checks/ inspection visits at its own or through authorized representative to verify the Comprehensive Maintenance activities being carried out by the Bidder. Failure to adhere to above guidelines will result in penal action including debarring from Participation in next bid.
m. if a system is non operational for more than seven days than warrantee period shall extend for the period in which system is non operational.

METERING AND GRID CONNECTIVITY

Metering and grid connectivity of the roof top solar PV system under this scheme would be the responsibility of the Bidder in accordance with the prevailing guidelines of the concerned DISCOM and / or CEA (if available by the time of implementation). CREDA could facilitate connectivity; however, the entire responsibility lies with bidder only.

PLANT PERFORMANCE EVALUATION

Average CUF of 19 % annually should be maintained for a period of 5 years. The bidder should send the monthly plant output details to CREDA for ensuring the CUF in prescribed format along with the reading of import and export measured through the CSPDCL Consumer Energy Meter.

PROGRESS REPORT

The bidder shall submit the progress report monthly to **CREDA** in Prescribed Performa. **If the monthly generation report is not received regularly for more than three months in continuation than the Bidder shall be proposed for black listing for at least two years or for the period as decided by CREDA**. CREDA will have the right to depute it's representatives to ascertain the progress of contract at the premises of works of the bidder.

Submission of Comprehensive Maintenance Report (CMR)

The bidder shall submit the Monthly Comprehensive Maintenance Report mandatorily to CREDA as per the Format enclosed at **Annexure A, every month**. Non submission of the report shall be considered as "Breach of Contract" and shall attract punitive actions as per the relevant provisions of the Contract including non-release of subsidy. However, the decision of Engineer–in -charge shall be final in this regard.

1.SOLAR PANELS

a. The panels are to be cleaned at least once every fifteen days.
b. Any bird droppings or spots should be cleaned immediately.
c. Use water and a soft sponge or cloth for cleaning.
d. Do not use detergent or any abrasive material for panel cleaning.
e. Iso-propyl alcohol may be used to remove oil or grease stains.
f. Do not spray water on the panel if the panel glass is cracked or the back side is perforated.
g. Wipe water from module as soon as possible.
h. Use proper safety belts while cleaning modules at inclined roofs etc.
i. The modules should not be cleaned when they are excessively hot. Early morning is particularly good time for module cleaning?
j. Check if there are any shade problems due to vegetation or new building. If there are, make arrangements for removing the vegetation or moving the panels to a shade-free place.
k. Ensure that the module terminal connections are not exposed while cleaning; this poses a risk of electric shock.
l. Never use panels for any unintended use, e. g. drying clothes, chips etc.
m. Ensure that monkeys or other animals do not damage the panels.

2.CABLES AND CONNECTION BOXES

a. Check the connections for corrosion and tightness.
b. Check the connection box to make sure that the wires are tight, and the water seals are not damaged.
c. There should be no vermin inside the box.

d. Check the cable insulating sheath for cracks, breaks or burns. If the insulation is damaged, replace the wire.
e. If the wire is outside the building, use wire with weather-resistant insulation.
f. Make sure that the wire is clamped properly and that it should not rub against any sharp edges or corners.
g. If some wire needs to be changed, make sure it is of proper rating and type.

3.INVERTER

a. The inverter should be installed in a clean, dry, and ventilated area.
b. Remove any excess dust in heat sinks and ventilations. This should only be done with a dry cloth or brush.
c. Check that vermin have not infested the inverter. Typical signs of this include spider webs on ventilation grills or wasps' nests in heat sinks.
d. Check functionality, e.g. automatic disconnection upon loss of grid power supply, at least once a month.
e. Verify the state of DC/AC surge arrestors, cable connections, and circuit breakers.

4. SHUTTING DOWN THE SYSTEM

a. Disconnect system from all power sources in accordance with instructions for all other components used in the system.
b. Completely cover system modules with an opaque material to prevent electricity from being generated while disconnecting conductors.
c. To the extent possible, system shutdown will not be done during day time or peak generation.

13. INSPECTION AND MAINTENANCE SCHEDULE

Component	Activity	Description	Interval	By
PV Module	Cleaning	Clean of bird droppings/dark spots on modules.	Immediately	User/ Technician
	Cleaning	Clean PV modules with plain water or mild dish washing detergent. Do not use brushes, any type of solvents, abrasive, or harsh detergents.	Fortnightly or as per the site conditions.	User/ Technician
	Inspections for plants >100 kW	Use infrared camera to inspect for hot spots; bypass diode failure	Annual	Technician

Component	Activity	Description	Interval	By
PV Array	Inspection	Check PV Module and rack for any damage note down location and serial no. of damaged modules	Annual	User/ Technician
	Inspection	Determine if any new object such as a vegetation growth are causing shading of the array and move them if possible.	Annual	User/ Technician
	Vermin removal	Remove bird nests or vermin from array and rack area	Annual	User/ Technician

Junction Boxes	Inspection	Inspect electrical boxes for corrosion or intrusion of water or insects. Seal boxes is required. Check position of switches and breakers. Check operation of all protection devices.	Annual	Electrician
Wiring	Inspection	Inspect cabling for signs of cracks, defects, loose connections, overheating, arching, short or open circuits, and ground faults.	Annual	Electrician
Inverter	Inspection	Observe	Monthly	Electrician

SPECIFICATION FOR SOLAR PHOTOVOLTAIC DRINKING WATER PUMPING SYSTEMS

1. SCOPE -

This specification covers design qualifications and performance specifications for Solar Photo Voltaic (SPV) Water Pumping Systems to be installed on a suitable bore-well.

2. TERMINOLOGY -

In addition to the terminology specified in Section **3** of IS 5120 and IEC 62253, thefollowing shall also apply.

a) **Static Water Depth**— It is the depth of water level below the ground level when the pump is not in operation.

b) **Draw-Down**—It is the elevation difference between the depth of static water level and the consistent standing water level in tube well during operation of pump set.

c) **Submergence**— It is the minimum height of water level after drawdown above the pumpsuction casing.

d) **Manometric Suction Lift**— Manometric suction lift is the vacuum gauge/suctionmanometer reading in meter of water column when pump operates at suction lift.

e) **Static Suction Lift**— Static suction lift/head is the vertical distance between sump waterlevel and centre of pump inlet.

f) **Daily Water Output**— It is the total water output on a clear sunny day with three times tracking SPV panel, under the "Average Daily Solar Radiation" condition of 7.15 KWh / m^2 on the surface of SPV array (i.e. coplanar with the SPV Modules).

g) **Wire to Water Efficiency**— It is the combined system efficiency of SPV Converter/ Controller with Inbuilt MPPT mechanism, Pump set and piping.

h) **SPV Controller**— Pump Controller converts the DC voltage of the SPV array into asuitable DC power and may also include equipment for MPPT, remote monitoring, and protection devices. They may be inbuilt or external.

i) **Maximum Power Point Tracker (MPPT)**— MPPT is an algorithm that is included in the pumpcontroller used for extracting maximum available power from SPV array under a given condition. The voltage at which SPV array can produce maximum power is called 'maximum power point' voltage (or peak power voltage).

3.CONSTRUCTIONAL FEATURES -

A. **General -**

SPV Water Pumping System set uses the irradiance available through SPV array. The SPV array produces DC power, which can be utilized to drive a DC pump/ controller. A SPV Water Pumping system typically consists of *Pump Set* Pump set may be of submersible type.

B. **MOTOR & CONTROLLER -**

The motor & controller of the pump set may be of the following types -.

i) **DC Motor or AC/DC Motor** PMSM/BLDC/SRM (with brush or brushless)

- The motor to be used shall be operated in DC voltage range of 30 to 300 V_{DC}.
- Overall Efficiency of Submersible pump set should be minimum 50%.

ii) Provision for remote monitoring (RMS/Data Logger and SPD) for the pumps ismandatory. It must be assigned with a unique serial number and its live status must be observed remotely on online portal through login credentials.

- Live status must indicate whether controller is ON/OFF.
- The parameter i.e. the water output, water flow rate, in fault condition, array input voltage/current, power and motor frequency should at logged at an interval of 10 minutes
- RMS must have a back up to store the data locally.

C. SOLAR MODULE/ PHOTO VOLTAIC (SPV) ARRAY –

1. The SPV DCR Module should be of capacity minimum 900Wp (300WpX3nos./450WpX2nos.) with minimum 19.5% Module Efficiency. Solar PV Mono Crystalline Module manufacturers will be enlisted under ALMM (Approved List of Models and Manufacturers).. The power output of individual PV modules used in the PV array, under STC. Use of PV modules with power output is preferred.
2. Modules supplied with the Solar Drinking Pump systems shall have certificate as per IS14286/IEC 61215 specifications or equivalent National or International/ Standards. STC performance data supplied with the modules shall not be more than one year old.
3. Modules must qualify to IS/IEC 61730 Part I and II for safety qualification testing.
4. The minimum module efficiency should be minimum 19.5 percent and fill factor shall be more than 70 percent.
5. Modules must qualify to IEC TS 62804-1:2015 for the detection of potential-induced e-gradation.
6. The name plate shall conform the IS 14286/IEC61215
7. Module to Module wattage mismatch in the SPV array mismatch shall be within (±) 3 percent.
8. Variation in overall SPV array wattage from the specified wattages shall be within zero percent to +10 percent.
9. The PV Modules must be warranted for output wattage, which should not be less than 90% of the rated wattage at the end of 10 years and 80% of the rated wattage at the end of 25 years.
10. IDENTIFICATION AND TRACEABILITY –

    Each PV module must use a RF identification tag (RFID), which mustcontain the following information:

    (i) Name of the manufacturer of PV Module

    (ii) Name of the Manufacturer of Solar cells

    (iii) Month and year of the manufacture (separately for solar cell and module)
    Country of origin (separately for solar cells and module)

    (iv) I-V curve for the module

    (v) Peak Wattage, I_m, V_m and FF for the module

    (vi) Unique Serial No and Model No of the module

    (vii) Date and year of obtaining IEC PV module qualification certificate

    (viii) Name of the test lab issuing IEC certificate

    (ix) Other relevant information on traceability of solar cells and module as perISO 9000 series.

    The RFID must be inside of module lamination. The module laminate, but mustbe able to withstand harsh environmental conditions.
11. All SPV modules must be indigenously built and made in India.

D. MOTOR-PUMP SET

1. Solar pump must be as per BIS/IEC/CE standards.
2. The SPV water pumping systems consists of DC Submersible pump set, AC/DC Submersible Pump set and AC/DC Pump Controller.
3. The "Motor-Pump Set" should have a capacity in the range of 0.5 HP to 1HP and should have the following features -

   a) The DC pump set or AC/DC pump set should be leakage proof.

   b) The motor of the capacity ranging from 0.5 HP to 1 HP should be DC or AC/DC. The suction and delivery head will depend on the site specific condition of the field.

   c) The pump should be PMSM/BLDC/SRM (with brush or brushless) and all parts of pump should be made of Stainless Steel. It should be suitable for bore well of minimum diameter of 4 inches. The pump should be operable for a voltage range of 30V – 300V. The dynamic head of the pump shouldbe 90 metres and the minimum shut off head shall be at 120 metres respectively. The minimum discharge is indicated in Annexure – VI.
4. The pump and its external parts of motor used in submersible pump which are in contact with water, should be of stainless steel of grade 304 or higher durability as required. The motor- pump set should have a 5 years warranty and therefore, it is essential that the construction of the motor and pump should be made using parts which have a much higher

durability and do not need replacement or corrode for at least 5 years of operation after installation.

5. The suction pipe shall be of HDPE type while the delivery pipe shall be GI column pipes of appropriate size, electric cables, floating assembly, civil work and other fittings required to install the Pump set. For the HDPE suction pipes, the minimum pressure rating shall be 8 kg/sq.cm-PE100 grade.

E. MECHANICAL COMPONENTS MODULE AND TANK MOUNTING STRUCTURE(MTMS)

1. The Structure as per drawings attached in Annexure – VII, should be installed along with the hot dipped galvanized (**minimum 80 Micron**) structure at site. The structure should be capable of withstanding a minimum wind load of 150 km per hour, after grouting and installation. MTMS should be sturdy & designed to assist SPV Modules to render maximum discharge. The hardware (fasteners) used for installation of SPV Modules should be of suitable Stainless Steel (SS 304) grade and that for structure shall be of suitable Stainless Steel (SS 304) grade or shall be GI. Structure should be grouted on pedestals & Foundation as per drawings. Each module should be fastened by four theft proof nut bolt. Only one GI sheets of thickness1.2mm as per drawing shall be permitted for placing of water tank on structure.
2. Module Mounting Structures should have theft proof arrangements with the use of GI Steel C-channel along with the array support structure for locking arrangement of SPV modules for protecting them from theft. Its size should be with reference to the specifications of the SPV modules such that modules can comfortably slide in the channel while installation. It should not hide any portion of the photovoltaic circuit encapsulated in the lamination of

   the SPV module, there by un-affecting the efficiency & rating of the SPV modules. Anti-Theft Nut Bolts of SS (with washers) should also be used for better theft proofing along with "C" Channel MMS.
3. The general hardware for structure fitment should be either SS 304 grade or GI. Modules should be locked with antitheft bolts of SS 304 Grade. Foundation should be as per drawing attached.
4. Modules must be compulsorily fitted with SS anti-theft bolts (with SS washers of 20mm diameter and 2.5mm thickness.
5. There must be sufficient passage between railing and water tank for free movement of technician around the water tank.
6. The inlet and delivery pipe line should be separate and fixed by GI clamp to Main Pole.
7. The ladder must be provided with suitable cage for easy movement technician up to tank tower base to avoid any fatal accidents.
8. There must be a sufficient distance of 3-4 feet between the tank lid/cap to solar module C-channel for the easy movement of technician for cleaning of water tank.

F. SOLAR DRINKING WATER PUMP CONTROLLER

1. Controller must Minimum IP-54 box and IP-65 for controller is allowed.

2. Controller may be inbuilt or of external type.

3. Maximum Power Point Tracker (MPPT) shall be included to optimally use thepower available from the SPV array and maximize the water discharge.

4. The Controller must have IP-65 protection or shall be housed in a cabinet having atleast IP-65 protection.

5. Adequate protections shall be provided in the Controller box to protect the solar poweredpump set against the following:

a) Dry running;
b) Open circuit;
c) Accidental output short circuit;
d) Under voltage;
e) Reverse polarity;
f) SPD to arrest high current surge; and
g) Lightening arrestor.

6. A good reliable DC Circuit Breaker as per IS/IEC 60947-2 suitable for switching DC power

ON and OFF shall be provided in the Controller.

7. All cables used shall be as per IS694. Suitable size of cable shall be used in sufficient length for inter-connection between the SPV array to Controller and the Controller to DC pump set. Selection of the cable shall be as per IS14536.
8. The SPV controller must be installed at a height of 8 feet the ground level to keep the controller out of reach from village people to ensure its safety.

G. EARTHING ARRANGEMENT

1. Earthing of the pump/controller shall be done as per IS 9283 in accordance with the relevant provisions of IS 3043. Two separate Earthings will be required. (One for LA and other for SPV pump, Structure & Controller.
2. For safety purpose, it shall be ensured during installation that the earthing is capableof taking care of leakage current.
3. In case of UPVC/HDPE pipes used as discharge pipe, a separate non-corrosive, low resistance
4. Conductor from motor earth terminal to control panel earth terminal shall beprovided for earthing.
5. A lightening arrestor shall be provided with every SPV Water Pumping System.

H. SURGE PROTECTION MECHANISM:

Internal surge protection shall consist of three MOV type arrestors connected from +ve and – ve terminals to earth (via Y arrangement) for higher withstand of the continuous PV-DC voltage during earth fault condition. Surge Protection Device (SPD) shall have safe disconnection and short circuit interruption arrangements through integrated DC in built bypass fuse (parallel) which should get tripped during failure mode of MOV, extinguishing DC arc safely in order to protect the installation against fire hazards. Nominal discharge current (In) at 8/20 micro seconds shall be minimum 10 KA with maximum discharge (I_{max}) at 8/20 micro seconds minimum 20 KA with visual indication (through mechanical flag) in modules to monitor the life of SPD. Internal surge protection should be connected to the earthing.

I. LIGHTNING ARRESTOR (LA):

Lightning Arrestor (of overall height being 2 feet more than the module mounting height) should be separate unit from the structure and confirming to IEC 62561 – 1, 2 & 7 detailedas below:
IEC 62561-1-Lightning Protection System Component (LPSC)-Part1- Requirement for connection components.
IEC 62561-2-Lightning Protection System Component (LPSC)-Part 2- Requirement for conductors and earth electrodes.
IEC 62561-7-Lightning Protection System Component (LPSC)-Part 7- Requirement for earthing enhancing compounds.

J. CABLES/WIRE:

All cables should be of copper as per IEC/BIC specification and should be of suitable grade as per requirement. All connections should be properly made through suitable lug/terminal crimped with use of suitable proper cable glands. The size of cables/wires should be designed considering the line losses, maximum load on line, keeping voltage drop within permissible limit and other related factors. The cable/wire should be of ISI/ISO mark for overhead distribution, with prior approval of CREDA. Please refer the below mentioned recommended cables sizes for the Solar Drinking Water Pump:-

S.N.	Location within the	Size (SQMM)	Cable Type
1	Pump - Controller	2.5 Sq mm 3 core Flat	Submersible Cable
2	Module- Controller	2.5 Sq mm, Single Core	Multi Cable
3	Tank - Controller	0.5 Sq mm, Single Core	Liquid Level Controller

K. SWITCHING DEVICE & FLUID LEVEL CONTROLLER:

Switching Device and Fluid Level Controller should be of the approved make and it should be in accordance with the electrical parameters of the Motor / Pump. Controllers should be fixed in suitable minimum IP 54 box and IP-65 for controller is allowed. Controller must have provisions for Remote Monitoring. Solar Pump Controller must have 5 years warranty.

L. Arrangement for cleaning of modules through a valve and flexible pipe from the inletpipe of the

tank at a suitable and safe point.

The same make of Solar Panels, pumps, inverter / controller shall be permitted for which the original and valid test report is submitted in the bid document should be supplied by the bidder.

M. PERFORMANCE REQUIREMENTS

Under the "Average Daily Solar Radiation" condition of 7.15 KWh / sq.m. on the surface of PV array (i.e. coplanar with the PV Modules), the minimum water output from a Solar PV Water Pumping System at different "Total Dynamic Heads" should be as specified below – REFERENCE:-

- Specification For Solar Photovoltaic Water Pumping Systems JNNSM Solar Photovoltaic Water Pumping Guidelines For Drinking Water Applications (2014-15) for b&c.
- Annexure-I of Circular No. F. No. 41/3/2018-SPV Division dated 17.7.2019 SPECIFICATIONFOR SOLAR PHOTOVOLTAIC WATER PUMPING

D.C. Motor Pump Set for drinking water applications (900Wp)-

Capacity 01HP, Pump Dynamic head 90 meter, Staging 06 Mtr. with water tank capacity 5000 ltr. – Min 5000 LPD

The actual duration of pumping of water on a particular day and the quantity of water pumped could vary depending on the solar intensity, location, season etc.

4. TESTS FOR HYDRAULIC AND ELECTRICAL PERFORMANCE OF PUMPSET -

i. The motor-pump set shall be tested independently/manufacturer's Certificates for hydraulic and electrical performance as per the relevant IS specification including following test -

a) Constructional requirements /features

b) General requirements

c) Design features

d) Insulation resistance test

e) High voltage test

f) Leakage current test

ii. Testing of SPV Water Pumping Systems shall be done as per procedure specified by the MNRE.

5. GUARANTEE OF PERFORMANCE –

a) The SPV Water Pumping Systems shall be guaranteed for their performance of the nominal volume rate of flow and the nominal head at the guaranteed duty point as specified in 3(L) under the "Average Daily Solar Radiation" condition of 7.15 KWh/m2 on the surface of SPV array (i.e. coplanar with the Photo Voltaic (PV) Modules). The actual duration of pumping of water on a particular day and the quantity of water pumped could vary depending on the solar intensity, location, season, etc.

b) Solar Photo Voltaic Water Pumping Systems shall be guaranteed by the manufacturer against the defects in material and workmanship under normal use and service for a periodof at least 60 months from the date of commissioning.

c) Sufficient spares for trouble free operation during the Warrantee period should be made available as and when required.

6. MARKING AND PARAMETERS TO BE DECLARED BYTHE MANUFACTURER –

The motor pump-set and Controller used in SPV Water Pumping Systems shall besecurely marked with the following parameters declared by the manufacturer :

i. Motor Pump-set -

a) Manufacturer's name, logo or trade-mark;

b) Model, size and SI No of pump-set;

c) Motor Rating (kW /HP);

d) Maximum Current(A);

j) Voltage Range (V)and;

k) Type - AC or DC Pump set;

ii. Controller – (if not inbuilt)

a) Manufacturer's name, logo or trade-mark;

b) Model Number;

c) Serial Number;

d) Voltage Range;

e) Power Range in kW for Controller ;and

f) Current rating(A)

7. OPERATION AND MAINTENANCE MANUAL -

An Operation and Maintenance Manual in Hindi, should be provided with the solar PV pumping system. The Manual should have information about solar energy, photovoltaic, modules, DC/AC motor pump set, mounting structures, electronics and switches. It should also have clear instructions about mounting of PV module, DO's and DONT's and on regular maintenance and Trouble Shooting of the pumping system. Helpline number and Name and address of the Service Centre and contact number of authorized representative to be contacted in case of failure or complaint should also be provided. A warranty card for the modules and the motor pump set should also be provided to the beneficiary.

Raw material test certificates (MTC) of all types of raw material used in Drinking Water Pump structure as per appropriate IS code should be submitted along with dispatch documents.

8. OVERHEAD WATER STORAGE TANK SPECIFICATION

Rotational Moulded Polyethylene Water Storage Tanks Specification: ISI marked Rotational Moulded Polyethylene Water Storage Tank conforming to IS: 12701-1996 with amendment. No 1 . The water storage tank should be as per the IS 12701: 1996 standards and must be able to withstand the stormy weather conditions. The tank material should be in such a way that it should not change the quality of water with increase of temperature. A hole of suitable internal diameter must be provided at the top of the tank for the purpose of inspection and entry into the tank.

1. Bidder shall be required to furnish satisfactory original test certificate from government laboratory such as CIPET etc, as per IS: 12701/96 (Reaffirmed-2006) Edition 2.2 for double layer tanks, for size 5KL before the installation.
2. Bidder is required to produce original documents/invoices/manufacturer's test certificate from O.E.Ms representing the material used in moulding, to the concerned inspectorate at the time of inspection for the lot.
3. Bidder/Manufacturer shall be registered with NSIC or DGS&D to IS: 12701:96 (Reaffirmed 2006) Edition 2.2 specifically indicating the sizes for double layer tanks on or before tender opening.
4. Bidder/manufacturer shall submit original and valid BIS licence specifically indicating the sizes for double layer tanks along with their tender.
5. Bidder shall have to ensure that the water tank for installation shall be CIPET tested dated October 2026 onwards by the manufacturer.
6. The SI shall have to ensure that the water tank is strictly as per the IS: 12701 1996 standards. The water tank must comply with the standards and specifications mentioned in the table below. CREDA reserves the right to test the water tank installed by the bidder. If the water tank fails in the testing, then necessary action shall be taken against the SI**. If any deformity or rupture etc. is found during and after the installation, the manufacturer as well as the concerned SI will be blacklisted for minimum three years from the activities of CREDA including participation in tenders.**

Sr	Clause	Particulars as per IS: 12701 1996	Unit	Specified Value 5000 L capacity tank
A. Tank Material				
1	4.2	Identification of material	----	Shall be Polyethylene
2	4.2.1	Density at 23° C (Base Material	kg/m³	932 to 943
3	4.2.2	Melt Flow Rate @ 190° C/load of 2.16 Kg	gm/10min	2.0 to 6.0
4	4.2.3 (a)	Carbon black content	%	2.0 to 3.0
5	4.2.3 (b)	Carbon black dispersion	----	Shall be satisfactory
B. Tank				
6	5.1 Table 1	a. Overall diameter range	mm	1800 to 2110
		b. Overall height range	mm	1800 to 2100
		c. Min internal diameter of manhole/handhole	mm	450
		d. Minimum wall & bottom thickness of tank	mm	10.7
7	5.3	Provision of flat area	----	Flat area is to be provided on top of the cylinder vertical tanks for worker to stand before entering the tank.
8	5.4	Wall thickness		
		a) upto the effective height	mm	10.7
		b) above the effective height	mm	Shall not be less than 75% of the values give in Table 1
9	5.6	a) Colour of the inner layer	----	Shall be white
		b) Colour of the outer layer	mm	shall be black
		c) thickness of the outer layer	mm	Shall be min 50% of the total thickness of the wall
10	6.1	Finish		Internal & external surface of tank shall besmooth, clean & free from other hidden internal defects, such as air bubble pits and metallic or other foreign material inclusions. The mold parting line and excess material near the top rim of the tank shall be cut and finished to the required level.
11	7.4	Tensile Strength at Yield	N/sq mm	12 (Min)
12	7.5	Flexural modulus	N/sq mm	300 (min)
13	9.1	Type of lid and locking arrangement	---	Lid shall fit securely over the top rim of thetank and it shall rest evenly on it in order to prevent the ingress of foreign matters. Lid shall also be provided with suitable locking arrangement
14	9.2.1	Lid Fitting to the man-hole	---	Lid shall fit securely and there shall be noclearance to permit 1.6 mm dia wire between top rim of tank & lid
15	NA	Height of Inlet in tank	mm	50 mm below the top surface of the tank.
16	NA	Height of outlet in tank	mm	50 mm above the bottom surface i.e. base of the tank.
C. Marking				
17	10.1	Water Tanks shall be marked with the following information:	---	Shall be there
		a) Manufacturer's name, initials or recognised trade mark;	---	Shall be there
		b) Net capacity in litres;	---	Shall be there
		c) Lot or Batch number, and year of manufacture	---	Shall be there
18	10.2	In additions to the marking by painting, the manufacturers nameor trade mark and net capacity of the tank shall be **moulded** on the external surface of the tank during manufacture.	---	Shall be there
19	10.3	BIS Certifications Marking: The tanks may also be marked with Standard Mark	---	Shall be there

Schematic diagram of water storage tank as per IS: 12701 1996

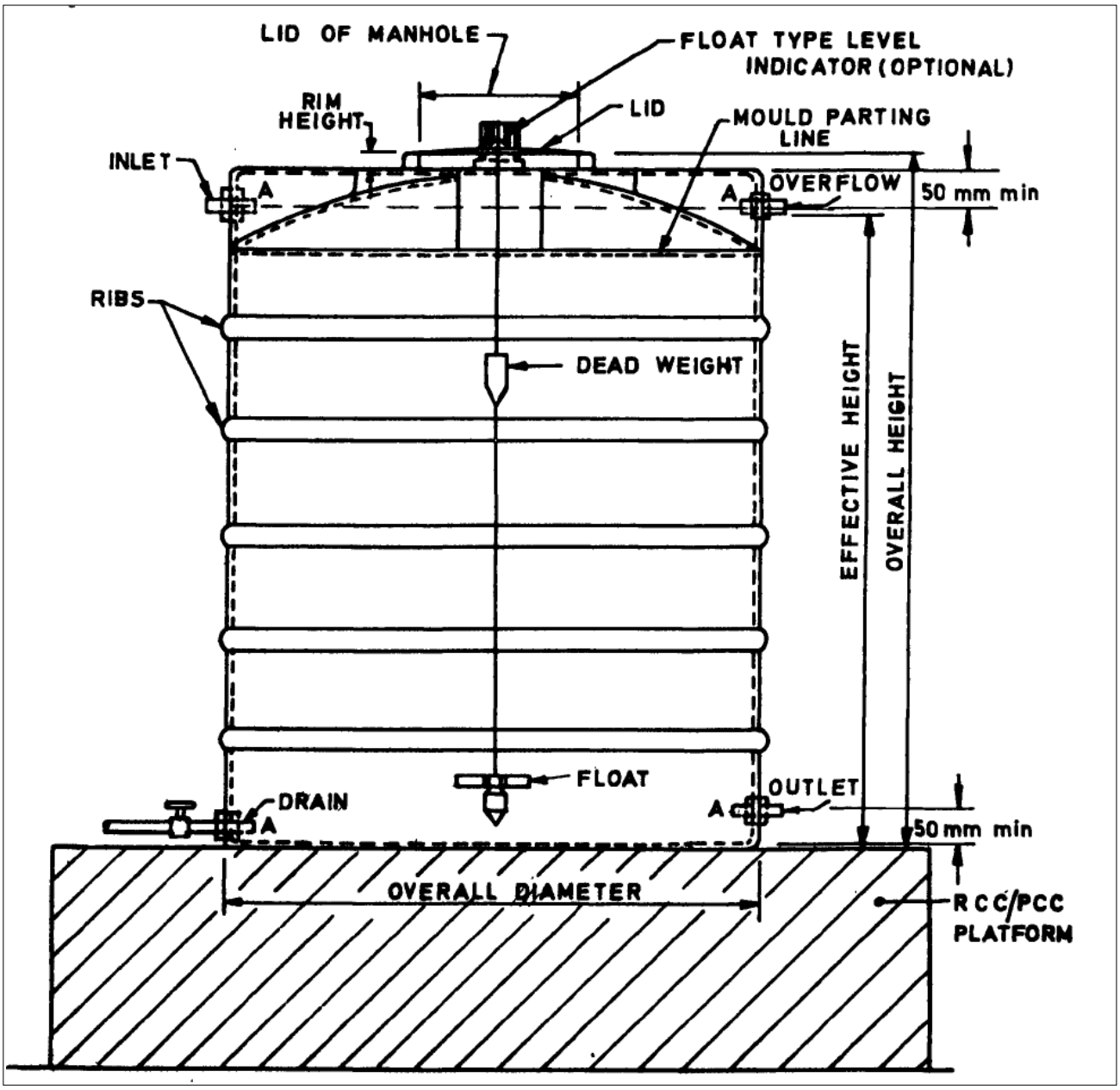

9. TESTS TO BE PERFORMED ON DRINKING WATER PUMP STRUCTURE FOR SOLARWATER PUMPING SYSTEM -

1. For ascertaining proper welding of structure part following should be referred -
   - **a.** Weld wire grade should be of grade **(ER 70 S -6)**
   - **b.** D.P. Test (Pin Hole / Crack) **(IS822)**
2. For ascertaining hot dip galvanizing of fabricated structure following should be referred -
   - **a.** Min coating required should be as per IS4759.
   - **b.** Testing of galvanized material.
     - **i.** Preece Test ($CuSO_4$ Dip Test) **(IS2633)**
     - **ii.** Mass of Zinc **(IS 6745)**
     - **iii.** Adhesion Test **(IS2629**

10. WATER SUPPLY SYSTEM& WIRE ROPE

The depth of submersible Pump shall be max 120 Mtrs or as per the depth of the bore with independent riser pipe. HDPE pipe should be as per pump outlet (HDPE pipe of 32 mm dia. considered) pump to hand pump special water chamber. Only Gl pipe of 50/32/25 mm size shall be used for over ground connection such as inlet, outlet and over flow connection of overhead tank

11. WIRE ROPE

The wire rope must be used to protect the pump from falling down and easy removal ofpump in case of any faults. The wire rope must be made up of stainless steel 6 Sq mm dia with all wire rope fittings, Slings etc .Selection of wire rope should be made in such a way that it should hold the pump perfectly if in any case the pump falls down due to breaking of wire rope then it shall be responsibility of SI to provide the new pump.

12. CIVIL SUPPLY / INSTALLATION:-

Civil supply / installation essential for erection of Overhead Tank Structure as per local site conditions and soil formation and drawing specified in the tender.

13. GALVANIZED TAP STAND:-

1. Tap Stand should be hot dip galvanized with having platform of 2mtr x 2mtr with proper drainage up to 3 mtr as per the drawing specified in tender.
2. Stand should consist of 4 numbers **of 25mm** stainless steel lift-cocktype taps at height min. 800 mm.

14. TEST REPORTS OF SPV PUMPS

a) Bidder must have original and valid test report(s) of SPV pump of 1HP solar DC pumping system with 900Wp (min.) solar modules separately in their names/manufacturer. Test report(s) is mandatory for eligibility to participate in the tender. Bidder will have to provide copy of test reports of their SPV pump(s) from the solar energy test centre, NISE or any other test centre accredited by MNRE/NABL. Bidder shall have to submit original test certificate/reports for the bidding pumps at the time of agreement. Bidder must have to submit FEA Report of Structure and other components.

b) Bidder must have either valid Test Report in his name or written consent from owner (hereinafter owner means manufacturer of SPV Module/Pump/Controller only) of the test report to use .

I&C PROCEDURES FOR SOLAR WATER PUMPING

Purpose

This document describes the Quality Assurance/Quality Control (QA/QC) procedures that should be used for the entire duration of the construction of a Photovoltaic (PV) pumping systems. These procedures are to be completed by the appropriate site personnel (project quality team) – District Officer, Service Providers, Contractors, subcontractors, and third party test & inspection representatives deployed for the project.
These procedures enable the project team to deliver a quality project that meets the CREDA design and construction standards, plus prevents defects that could affect quality, reliability, and performance of the Photovoltaic (PV) pumping system and, thereby increasing useful life of the system.

Pumping System Project Operating Procedures

Safety

ELECTRICITY IS DANGEROUS- HANDLE WITH CARE. WHEN SEVERAL PANELS ARE CONNECTED TOGETHER THERE CAN BE HIGH VOLTAGES PRODUCED.

- Do not short circuit solar modules without any reason, a short circuit can lead to spark and evencable damages. All open ends of cables are insulated
- Ensure personal safety during excavation, erection and material handling.

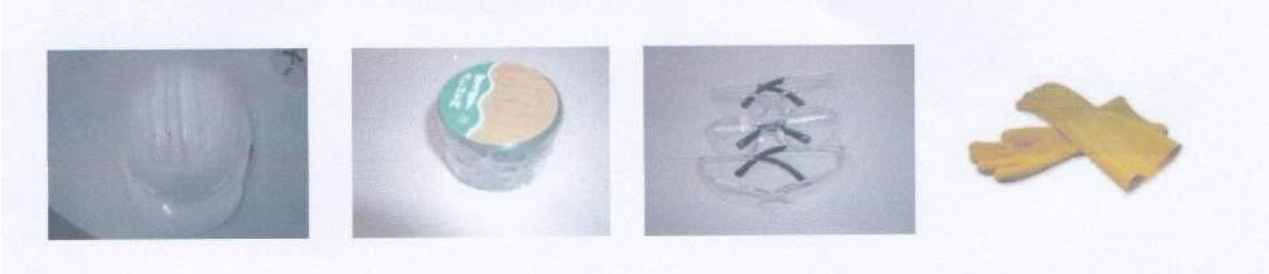

Survey Works

- For excavation, the marking of the block needs to be done as per the approved block drawing. Visual/Physical inspection is to be undertaken as per drawings
- Foundation marking needs to be undertaken as per approved construction drawings. The position ofthe foundation with respect to the module mounting needs to be ascertained by physical measurement

Excavation works

- Nature and type of soil needs to be ascertained visually before excavation
- Initial ground level needs to be marked before start of the excavation as per the approvedconstruction drawings
- Final Shape and dimension of the excavation along with final excavation level needs to be measuredas per the technical specification in the construction drawing.

Compaction of filled soil

- Soil quality and water level needs to be visually inspected for each site before PCC bedding. Soil compactness needs to be visually checked for each site.

Construction Materials

- Cement needs to be procured from ISI certified brand with minimum grade of cement of **OPC 53 grade/ PPC mixed as per M-20 mixed proportion**. Cement storage needs to done in weather tight covered storage platform and stacking of cement bags needs to be proper. Random inspection to be undertaken.
- Coarse aggregate particle size needs to be **less than 20mm**.
- Fine aggregate/MS sand particle size needs to be around 5 mm with mix of foreign materials.
- **One Cube test by every contractor** needs to be tested for compression strength and basis results, compaction ratio and grade of material will be established, which will be followed throughout the project. If required, basis site requirements, separate cube test can be undertaken to establish site specific compaction ration/material mix.

Reinforcement Steel and Placement

- Reinforcement steel needs to be free of cracks, surface flaws and lamination as per technical specification under IS: 1786, IS:432 and IS:1852
- Bending of Bars and tolerance levels needs to be established as per IS:2502
- Spacing of bars, reinforcement cage placement is to be visually inspected as per IS:2502 andapproved construction drawings
- Reinforcement bar centre line alignment, depth and verticality needs to be reviewed as perapproved foundation drawings.

Concrete

- Concrete trial mix and design mix is to be tested in lab as per IS:456, SP:23, IS:10256. One cube testper contractor is to be tested for crushing strength as per IS:456
- Dimension and visual examination for finished concrete with minimum curing time of 7 days is to be undertaken. The cured concrete block should be free from foreign and oversized aggregates.

Raw Materials Inspection

- Raw material is to be procured from reputed manufacturer with ISI branded, CM/L branded with material test certificate to be submitted for inspection and clearance.

Item : HDPE –pipe.

Ref. standard: IS 4984/ Drawing. Application- Irrigation ASTMD for Drinking Water.

Quality check: ISI mark, Grade, thickness, diameter, visual check on crack/ ovality, lumps, colour change, thickness variation, RTC

MMS and Module Assembly

- Structure parts needs to be numbered along with SS hardware. Assembly is to be undertaken as per steps illustrated by Manufacturer. First system per contractor will be treated as a demosystem to establish key work practices for each contractor.
- Module mounting on tilt angle and orientation needs to be carefully done with hardware tightening as per standard operation procedures. Torque wrench is required for tightening all module hardware. MMS assembly to be done in line with the installation drawing and ensure proper alignment and tightness with torque wrench. Ensure antitheft hardware locking with torque for each bolt to be ensured as per below mentioned table. After tightening the nut, permanent marking to be done to ensure that proper tightening done.

- **Round washer/Square washer** used for Module fixing to structures as square washers have a larger surface area than round washers. This type of washer is also specified for handling vibrations especially in high speed wind zones.
- Module wiring as per wiring diagram to be undertaken taking care thatn no physical damage to insulation is to be accepted.

- String and array testing for designed Voc needs to be checked.
- Ground clearance with degree of tilt and rotation is to be clearly identified to avoid damage tomodules. Each modules frame is to be grounded with structure earthing.

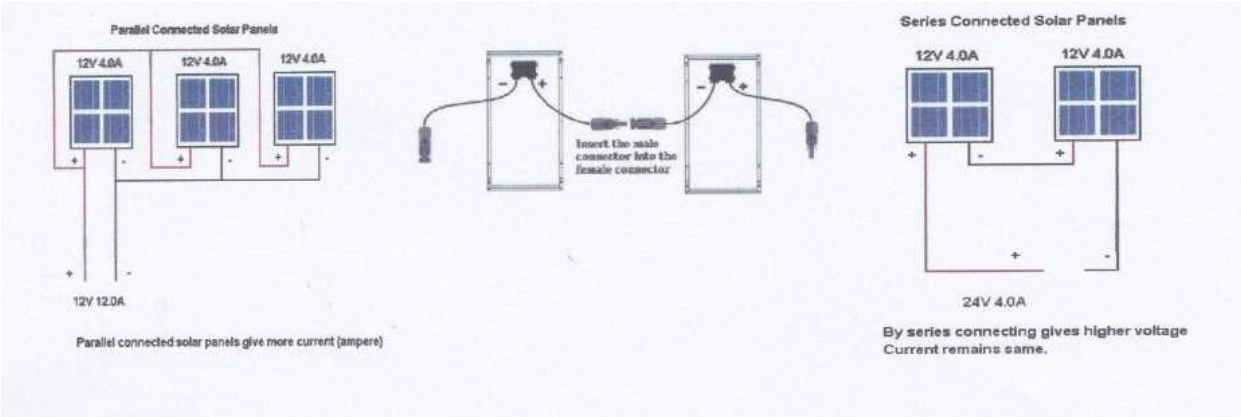

Pump Assembly and Testing

- Bore wells needs to be checked for quality of water and cleanliness. Inclination angle needs to be confirmed as per manufacturer's manual.
- To test the pump in, you can test it dry by watching the pump shaft and running it for only a few seconds. The metal label on the pump has an arrow to indicate the proper direction of rotation. It can be run dry safely for about 5 seconds. This gives more than enough time to observe the direction of the shaft.
- Splicing of wires needs to be undertaken as per manufacturer's recommendation. Adequate length of insulation is to be removed so that multi-core cable joints can be visually seperated with crimped connectors. Rubber sleeve needs to cover the crimpted connector for additional protection with electrical protective tape on it.

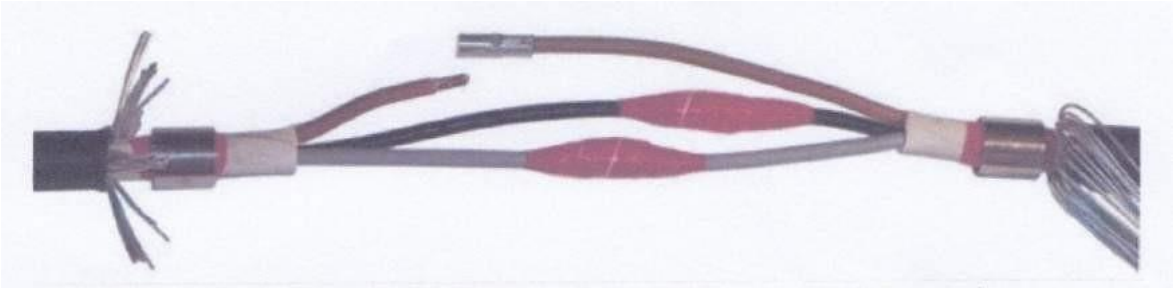

- Each SPV Drinking WaterPumpshould be tested as per details in manufacturer's manual.

Final Inspection and Testing

- Voc check across each module string for each installation is to be verified for eachinstallation
- Earthing check for insulation resistance to be check with calibrated instrument. Approveddrawing to be consulted with earthing resistance less than 5 Ohms.

List of equipment required for Installation & Commissioning of Pumps

Equipment for Solar Pumping System						
S. No.	Instrument required	How it looks like	Purpose	Range	Quantity (min)	Remarks

1	Cube mould		For making cubes	150x150x150	36 no.s	One mould can be kept.
2	Measuring Tape		For measurement	0-5mtr 0-10mtr	01	
3	Spirit level		For level checking	Sensitivity 2 mm for a tilt of 0.005 degree	02	
4	Inclinometer		Incline measurement	Measurement range 0- 360^0 (4 x 90^0)	01	
5	Torque Wrench	Reputed Make i.eTaparia	For tightening module hardware	Measurement range 0-100 N -m	01	
6	Earth resistance tester	Reputed Make	Waco makeor equivalent	< 0-1-10 -50 ohms	01	
7	Tong tester	Reputed Make	Mico	0-20 A, 0-1000 V	01	
8	Flow tester	Reputed Make as per requirements.			01	
9	Digital Multimeter	Reputed Make	Mico	0-20 A, 0-1000 V	01	
10	Tools	Spaner, rachet, cutting piler,wire stripper, insulation tape, crimping tool, hammer.	Reputed make	As per requirements	1 set/ contractor	General tool

Indicative markings on Water Storage Tank and CREDA Logo to be pasted on SPV module.

A. Markings on Water Storage Tank to be ensured by the Bidder
1.5000 Litres

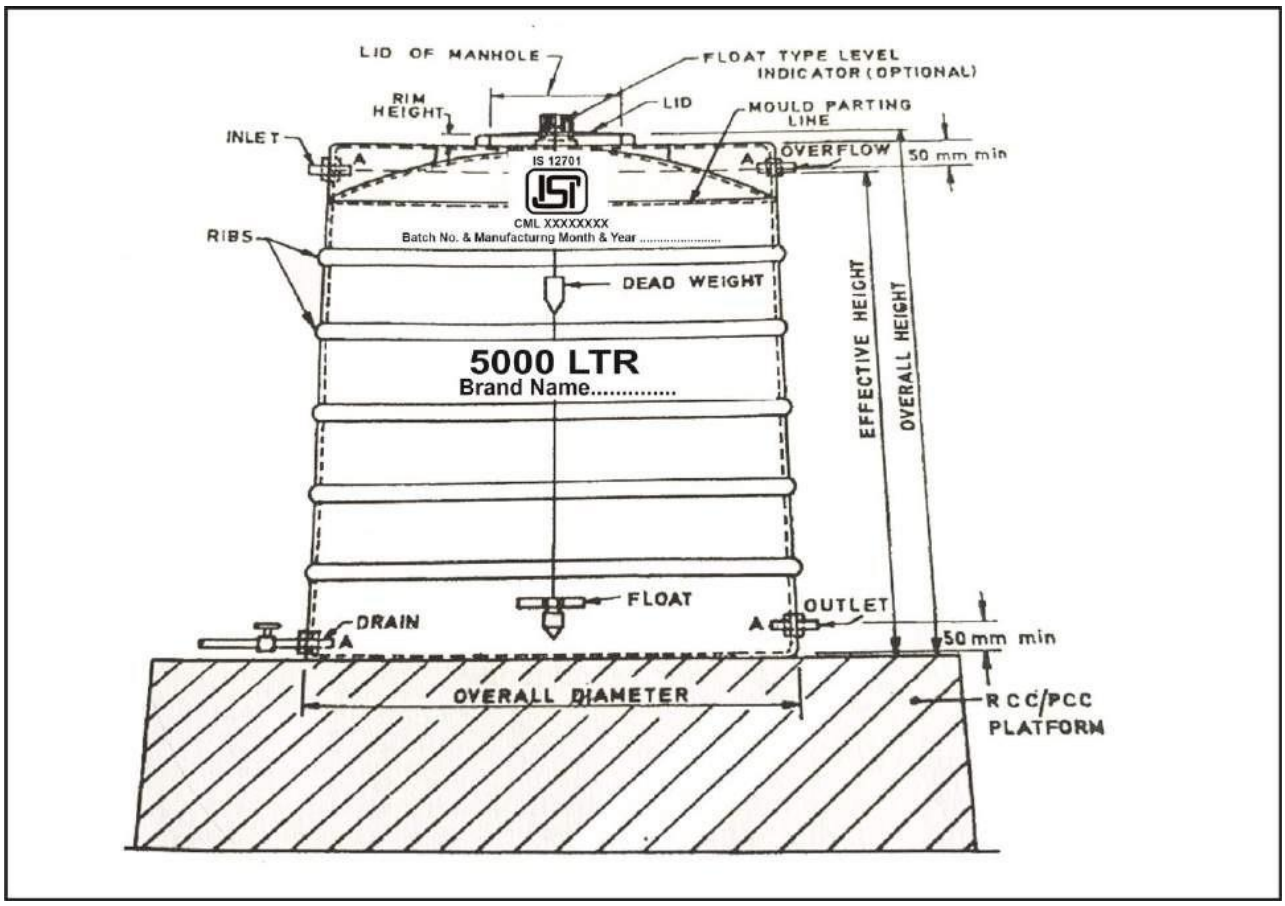

Indicative Discharge Requirement of Solar Deep well (submersible) Pumping Systems with D.C. Motor Pump Set [PMSM/BLDC/SRM (with brush or brushless)]

S. No.	Description	Required Water Output (Min.)
1	Solar Drinking Water Pump PV array 900 Wp (minimum), motor Pump-set capacity 01HP, Pump Dynamic head 90 metres, Staging 06 Mtr. with water tank capacity 5000 ltr.	5000 Litre per day

*Water output figures are on a clear sunny day of SPV panel, under the "Average Daily Solar Radiation" condition of 7.15 kWh/sq. m on the surface of PV array (i.e. coplanar with the PV Modules)

Note -

For higher or lower head, or in between various models; water output could be decided as per the clause 4(i.e. Performance Requirements) specified earlier.

A. Complete Indicative drawing of 900 Wp/1 HP, 06Mtr Staging, 05KL Solar Drinking Water Pump structure & civil works [High resolution version can be found in 'Other Documents' titled "Doc1" as well as on the e-bidding portal as attachment]

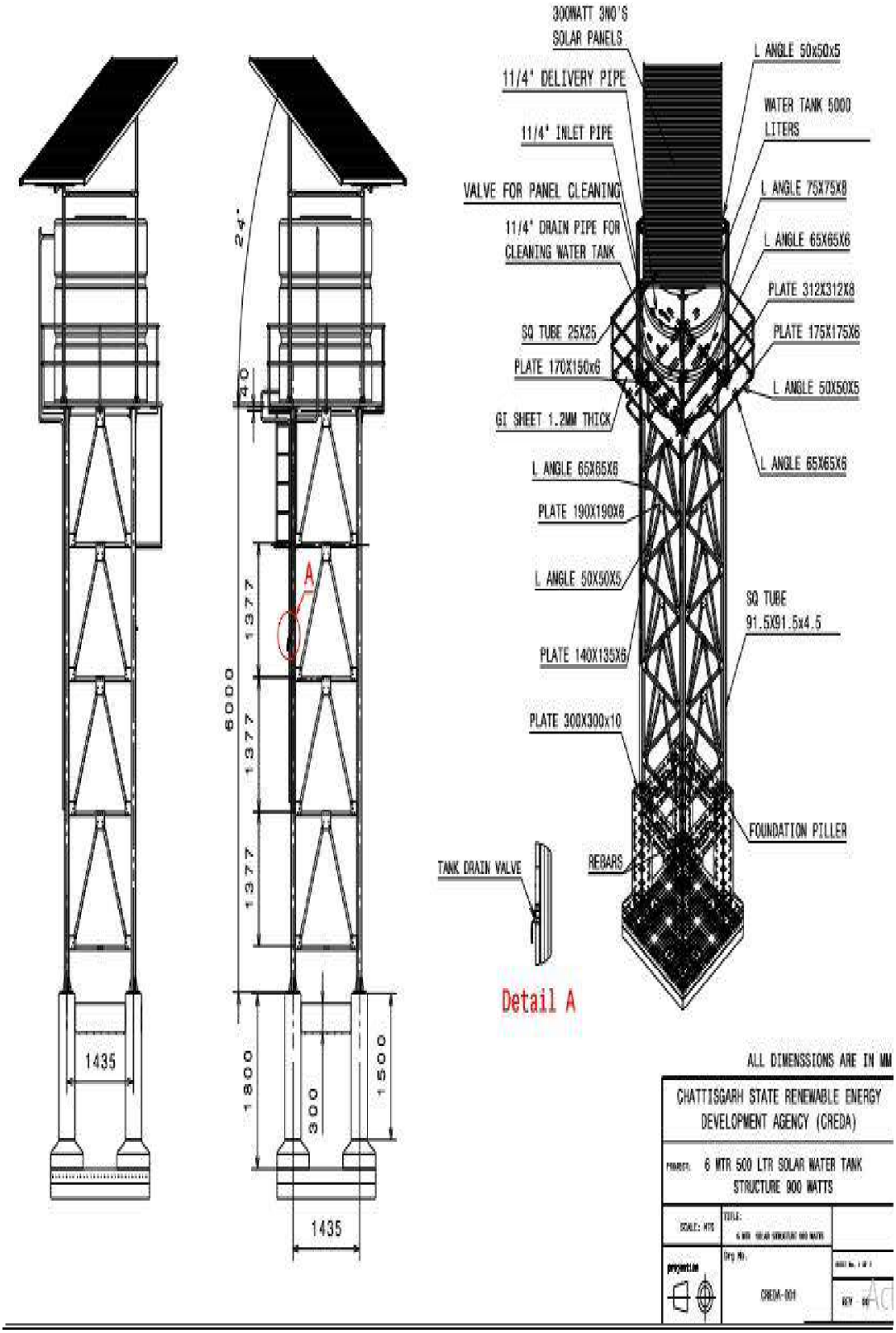

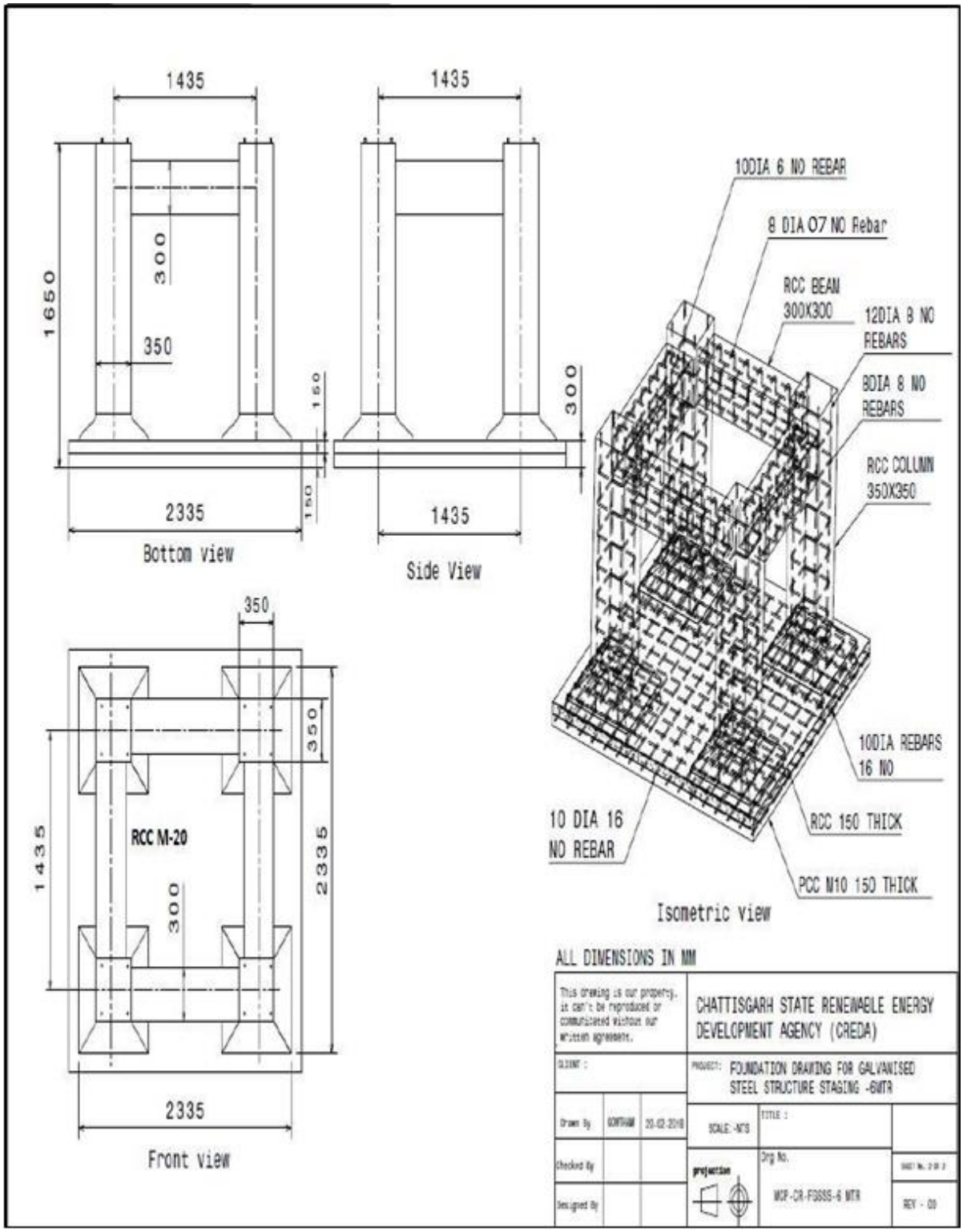
1435
1435
1650
300
350
150
150
300
2335
1435
Bottom view
Side View
350
350
1435
RCC M-20
300
2335
2335
Front view
10DIA 6 NO REBAR
8 DIA O7 NO Rebar
RCC BEAM 300X300
12DIA 8 NO REBARS
8DIA 8 NO REBARS
RCC COLUMN 350X350
10DIA REBARS 16 NO
10 DIA 16 NO REBAR
RCC 150 THICK
PCC M10 150 THICK
Isometric view
ALL DIMENSIONS IN MM
This drawing is our property, it can't be reproduced or communicated without our written agreement.
CHATTISGARH STATE RENEWABLE ENERGY DEVELOPMENT AGENCY (CREDA)
CLIENT :
PROJECT: FOUNDATION DRAWING FOR GALVANISED STEEL STRUCTURE STAGING -6MTR
Drawn By
SOMYAM
20-02-2018
SCALE: -NTS
TITLE :
Checked By
projection
Drg No.
MSF-CR-FGSSS-6 MTR
Designed By
REV - 00

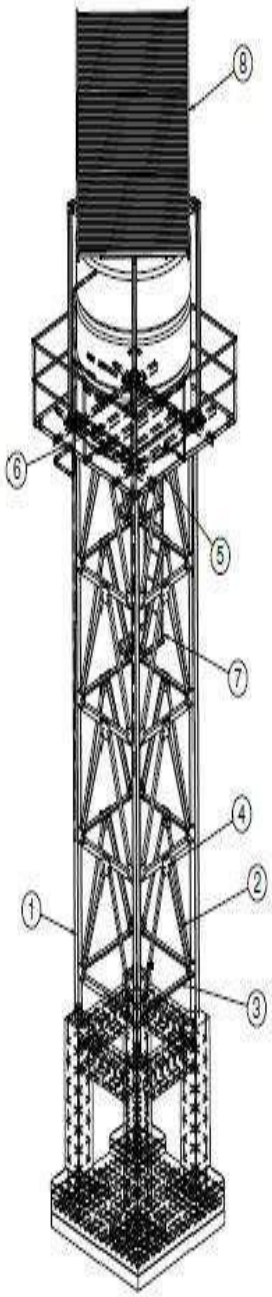

ISOMETRIC VIEW

CHATTISGARH STATE RENEWABLE ENERGY DEVELOPMENT AGENCY (CREDA)		
PROJECT TITLE 6 MTR 5000 LTR SOLAR WATER TANK STRUCTURE 900 WATTS		
SCALE:-NTS	TITLE 6 MTR 5000 LTR SOLAR WATER TANK STRUCTURE 900 WATTS	REF No. AK
projection	Drg No. CREDA 002	SHEET No. 1 OF 9
		REV - 01

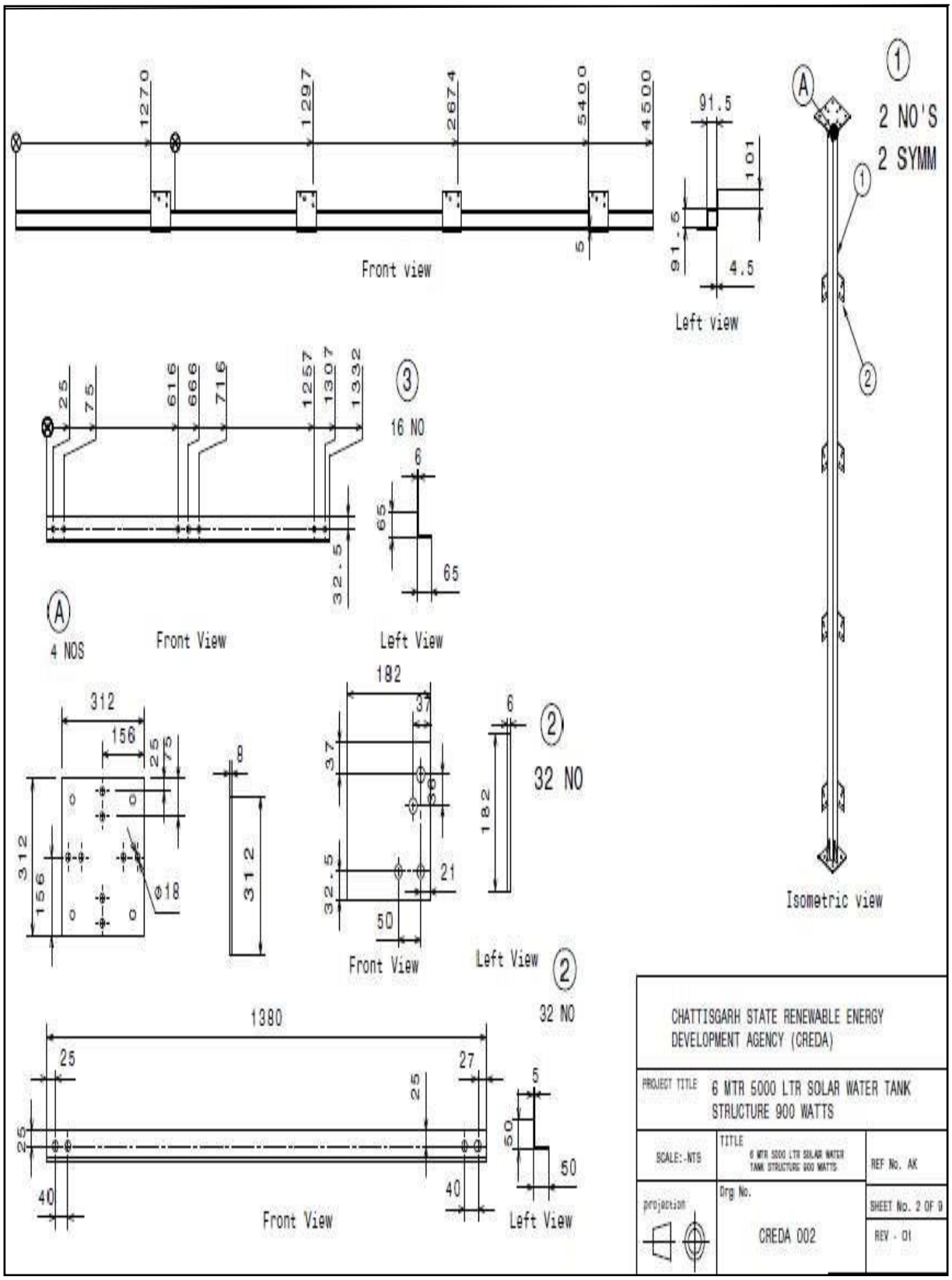
1270
1297
2674
5400
4500
Front view
91.5
101
91.5
4.5
Left view
2 NO'S
2 SYMM
25
75
616
666
716
1257
1307
1332
16 NO
6
65
65
32.5
4 NOS
Front View
Left View
312
156
25
75
8
312
156
Ø18
312
182
37
37
36
21
32.5
50
Front View
6
32 NO
182
Left View
32 NO
1380
25
27
25
25
40
40
Front View
5
50
50
Left View
Isometric view
CHATTISGARH STATE RENEWABLE ENERGY DEVELOPMENT AGENCY (CREDA)
PROJECT TITLE
6 MTR 5000 LTR SOLAR WATER TANK STRUCTURE 900 WATTS
SCALE:-NTS
TITLE
6 MTR 5000 LTR SOLAR WATER TANK STRUCTURE 900 WATTS
REF No. AK
projection
Drg No.
CREDA 002
SHEET No. 2 OF 9
REV - 01

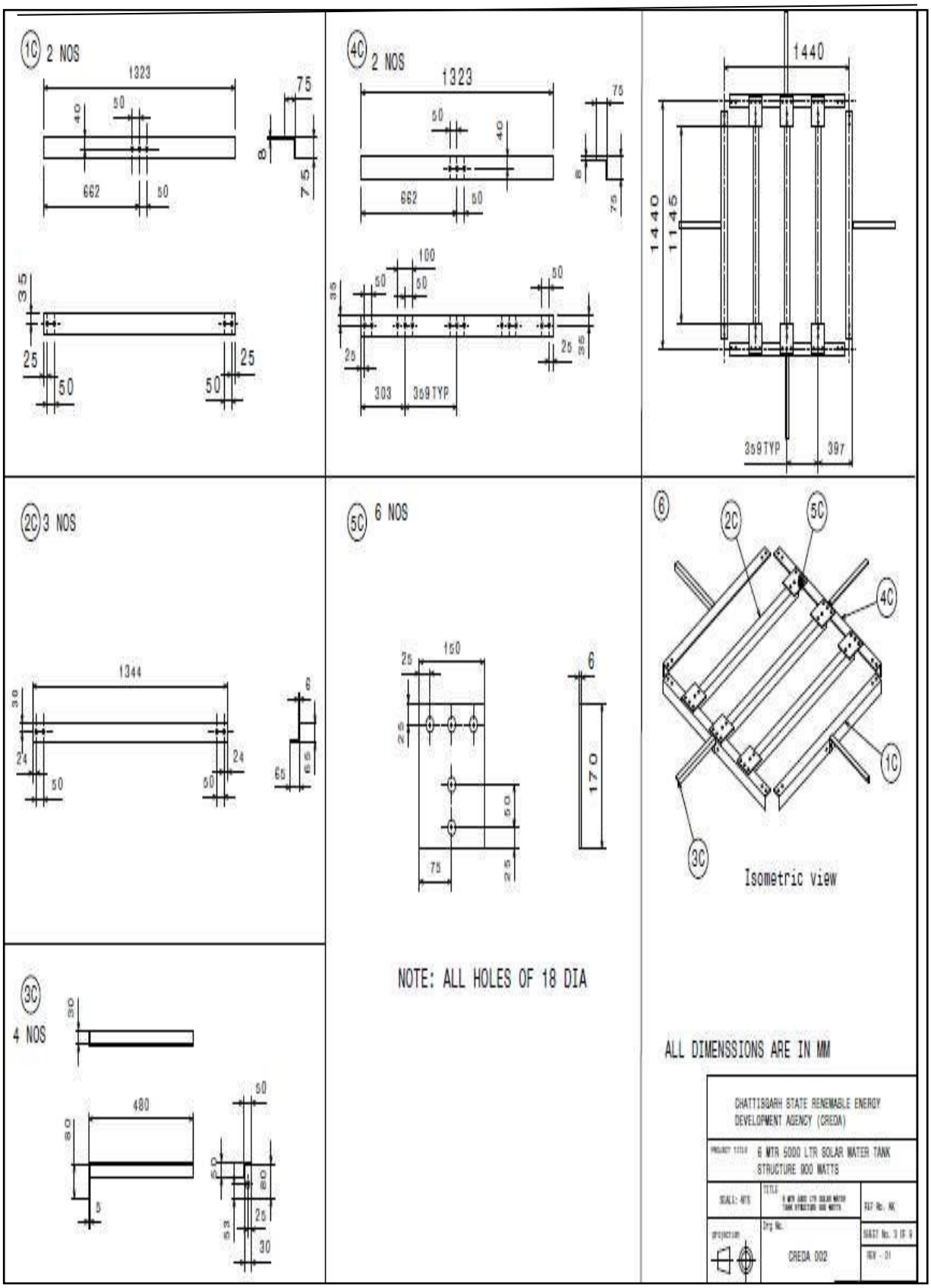
1C 2 NOS
4C 2 NOS
2C 3 NOS
5C 6 NOS
6
3C
4 NOS
Isometric view
NOTE: ALL HOLES OF 18 DIA
ALL DIMENSSIONS ARE IN MM
CHATTISGARH STATE RENEWABLE ENERGY DEVELOPMENT AGENCY (CREDA)
6 MTR 5000 LTR SOLAR WATER TANK STRUCTURE 900 WATTS
CREDA 002

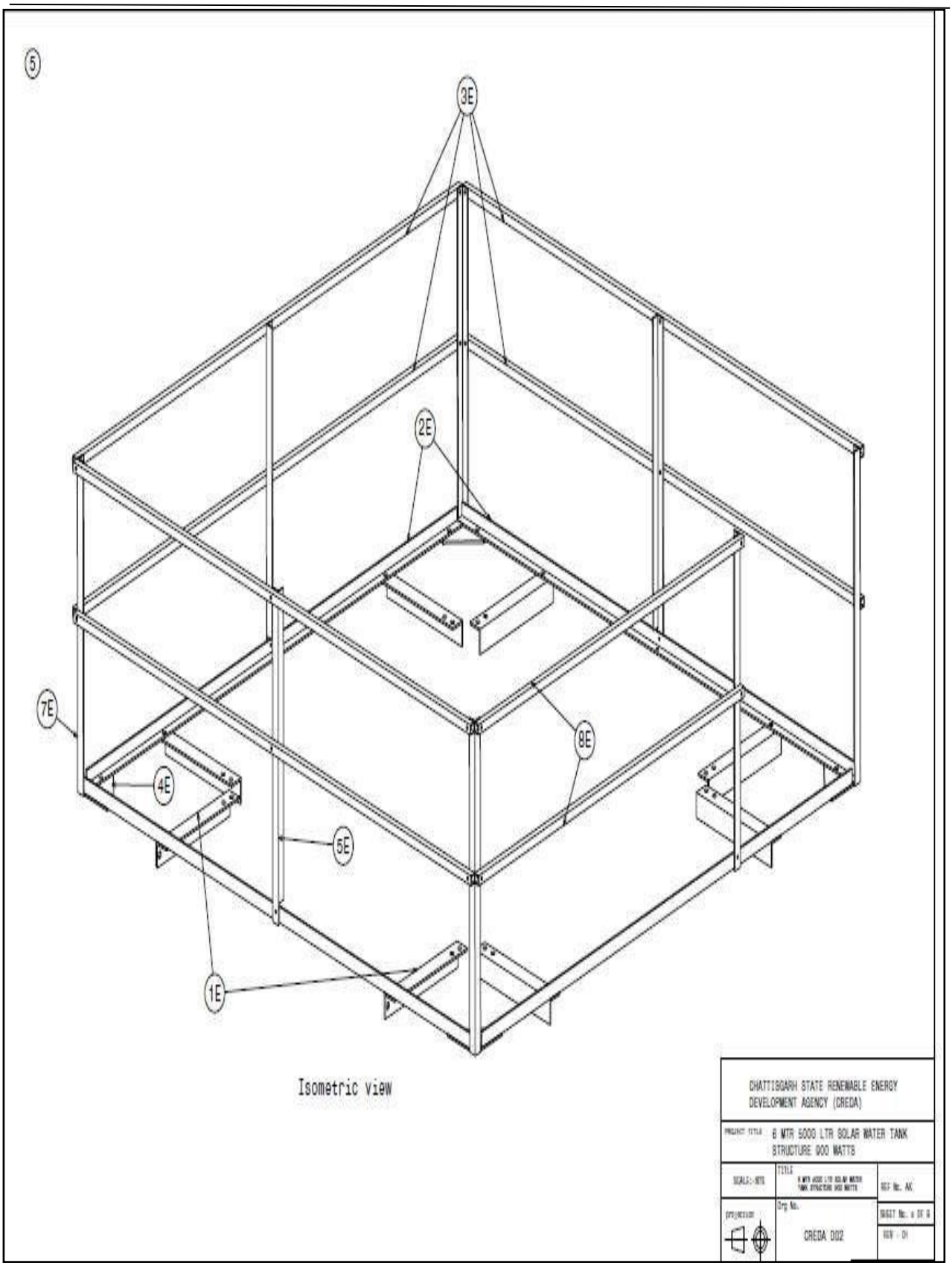
5
3E
2E
7E
8E
4E
5E
1E
Isometric view
CHATTISGARH STATE RENEWABLE ENERGY DEVELOPMENT AGENCY (CREDA)
PROJECT TITLE
8 MTR 5000 LTR SOLAR WATER TANK STRUCTURE 900 WATTS
SCALE:-NOTE
TITLE
REF No. AK
Drg No.
CREDA 002
SHEET No. 1 OF 1
REV - 01

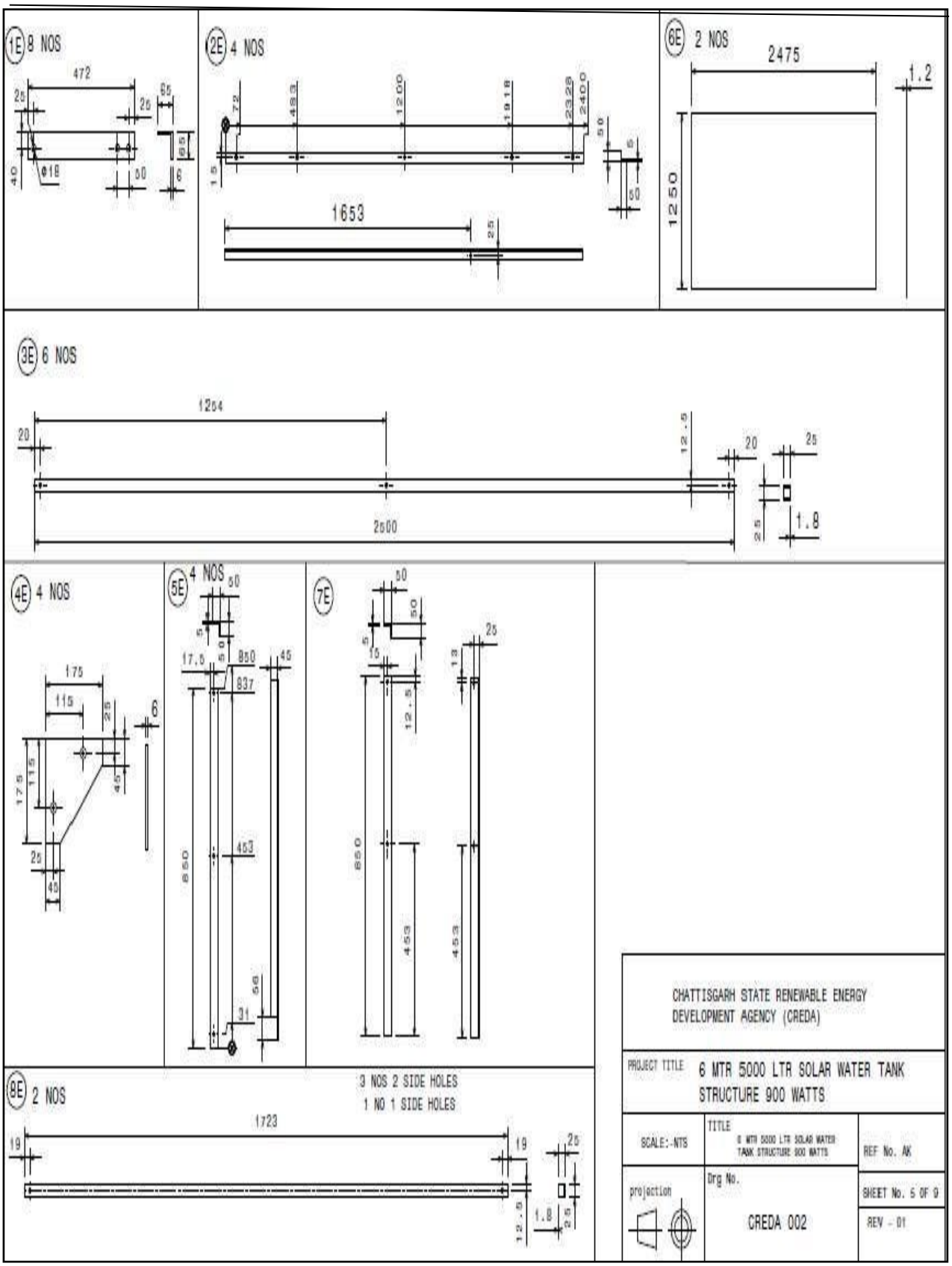
1E 8 NOS
2E 4 NOS
6E 2 NOS
2475
1.2
1250
1653
3E 6 NOS
1254
2500
4E 4 NOS
5E 4 NOS
7E
8E 2 NOS
1723
3 NOS 2 SIDE HOLES
1 NO 1 SIDE HOLES
CHATTISGARH STATE RENEWABLE ENERGY DEVELOPMENT AGENCY (CREDA)
PROJECT TITLE
6 MTR 5000 LTR SOLAR WATER TANK STRUCTURE 900 WATTS
SCALE:-NTS
TITLE
6 MTR 5000 LTR SOLAR WATER TANK STRUCTURE 900 WATTS
REF No. AK
projection
Drg No.
CREDA 002
SHEET No. 5 OF 9
REV - 01

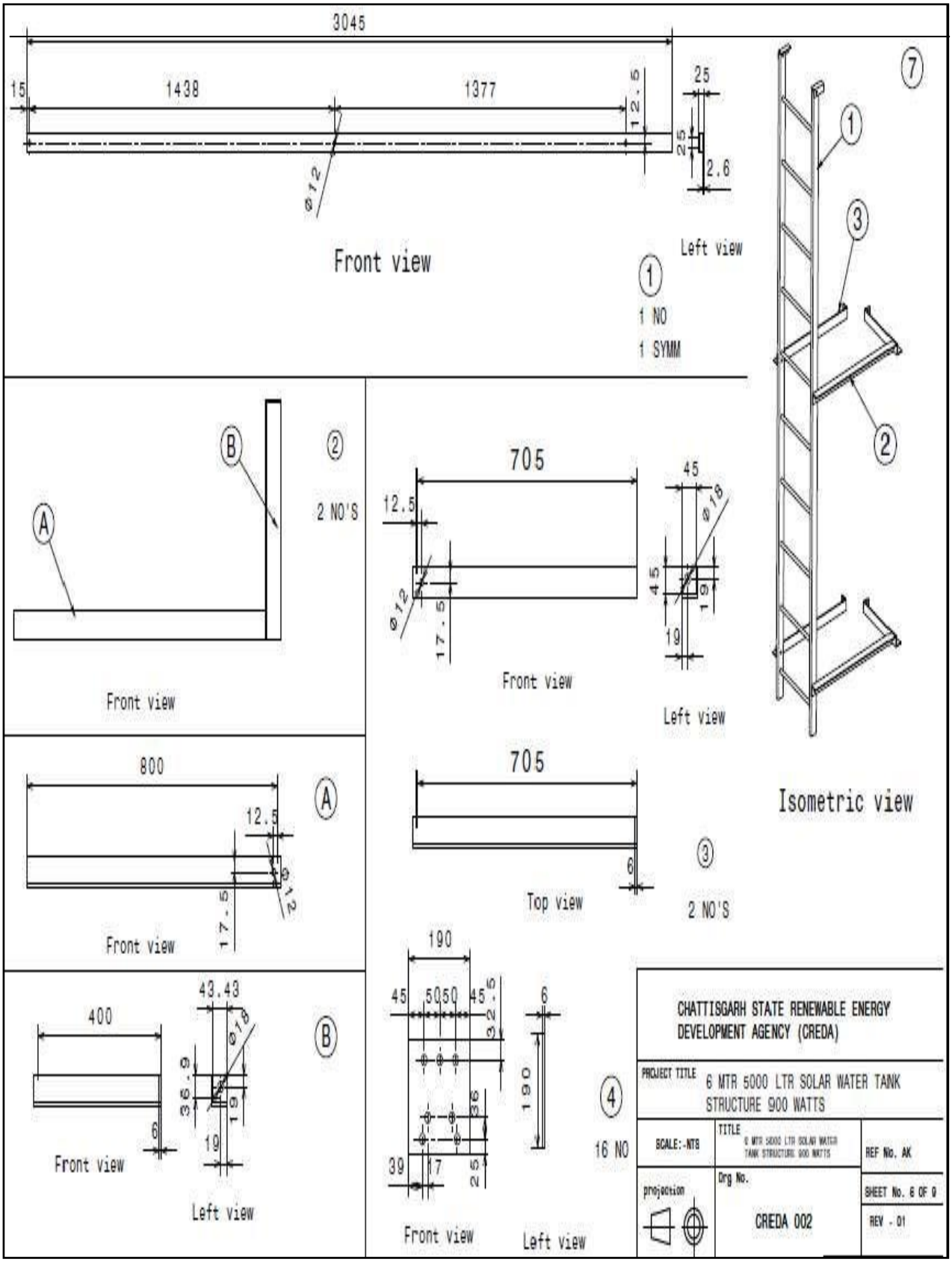
3045
15
1438
1377
12.5
25
25
2.6
Ø12
Front view
Left view
1
1 NO
1 SYMM
7
1
3
2
Isometric view
B
A
2
2 NO'S
Front view
705
12.5
45
Ø18
45
19
19
Ø12
17.5
Front view
Left view
800
12.5
A
Ø12
17.5
Front view
705
6
Top view
3
2 NO'S
400
43.43
Ø18
36.9
19
19
6
Front view
Left view
B
190
45
50
50
45
32.5
6
190
36
39
17
25
Front view
Left view
4
16 NO
CHATTISGARH STATE RENEWABLE ENERGY DEVELOPMENT AGENCY (CREDA)
PROJECT TITLE
6 MTR 5000 LTR SOLAR WATER TANK STRUCTURE 900 WATTS
SCALE:-NTS
TITLE
6 MTR 5000 LTR SOLAR WATER TANK STRUCTURE 900 WATTS
REF No. AK
projection
Drg No.
CREDA 002
SHEET No. 6 OF 9
REV - 01

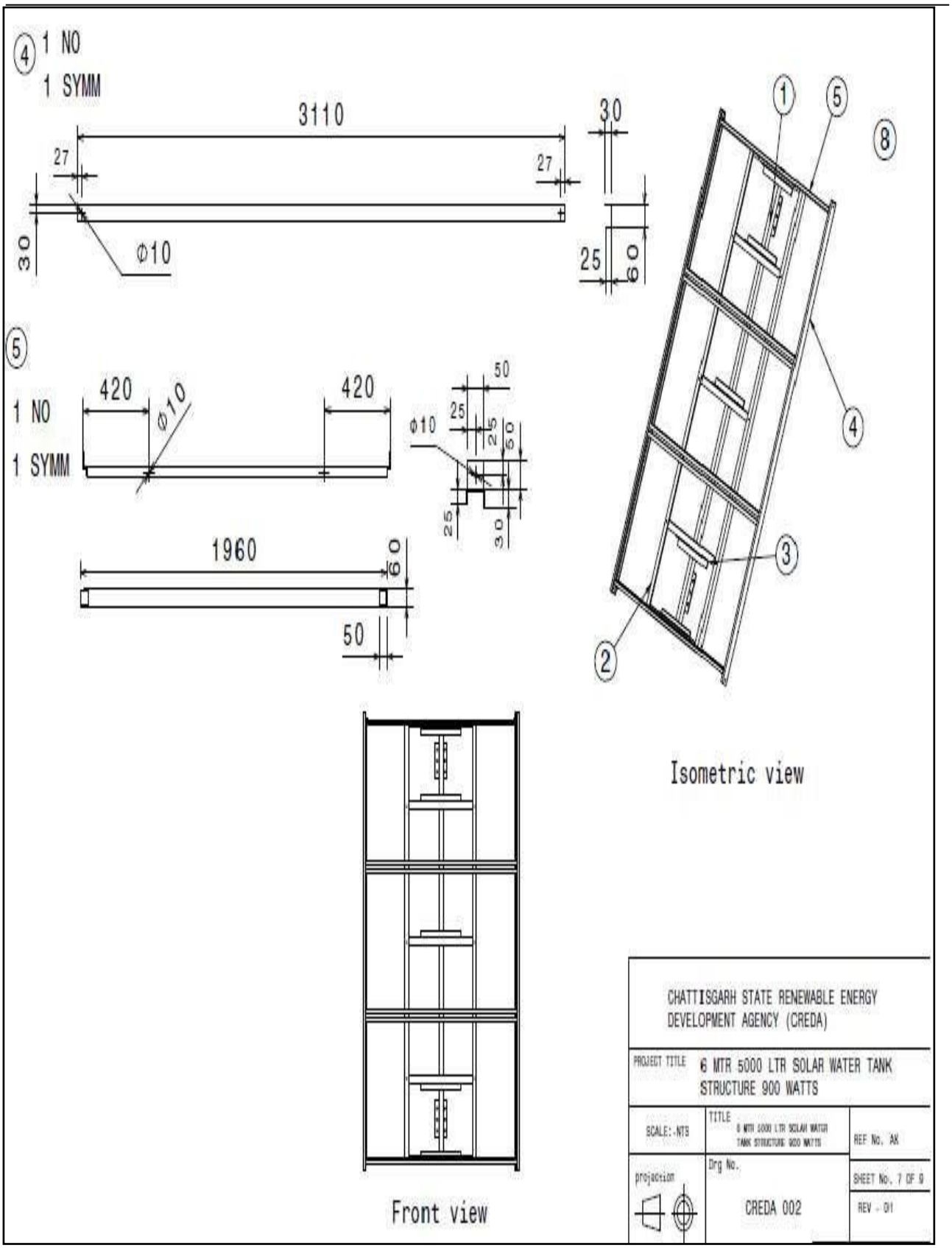
4
1 NO
1 SYMM
3110
27
27
30
Φ10
30
25
60
5
1 NO
1 SYMM
420
Φ10
420
Φ10
50
25
25
60
25
30
1960
60
50
1
5
8
4
3
2
Isometric view
Front view
CHATTISGARH STATE RENEWABLE ENERGY DEVELOPMENT AGENCY (CREDA)
PROJECT TITLE
6 MTR 5000 LTR SOLAR WATER TANK STRUCTURE 900 WATTS
SCALE:-NTS
TITLE
6 MTR 5000 LTR SOLAR WATER TANK STRUCTURE 900 WATTS
REF No. AK
projection
Drg No.
CREDA 002
SHEET No. 7 OF 9
REV - 01

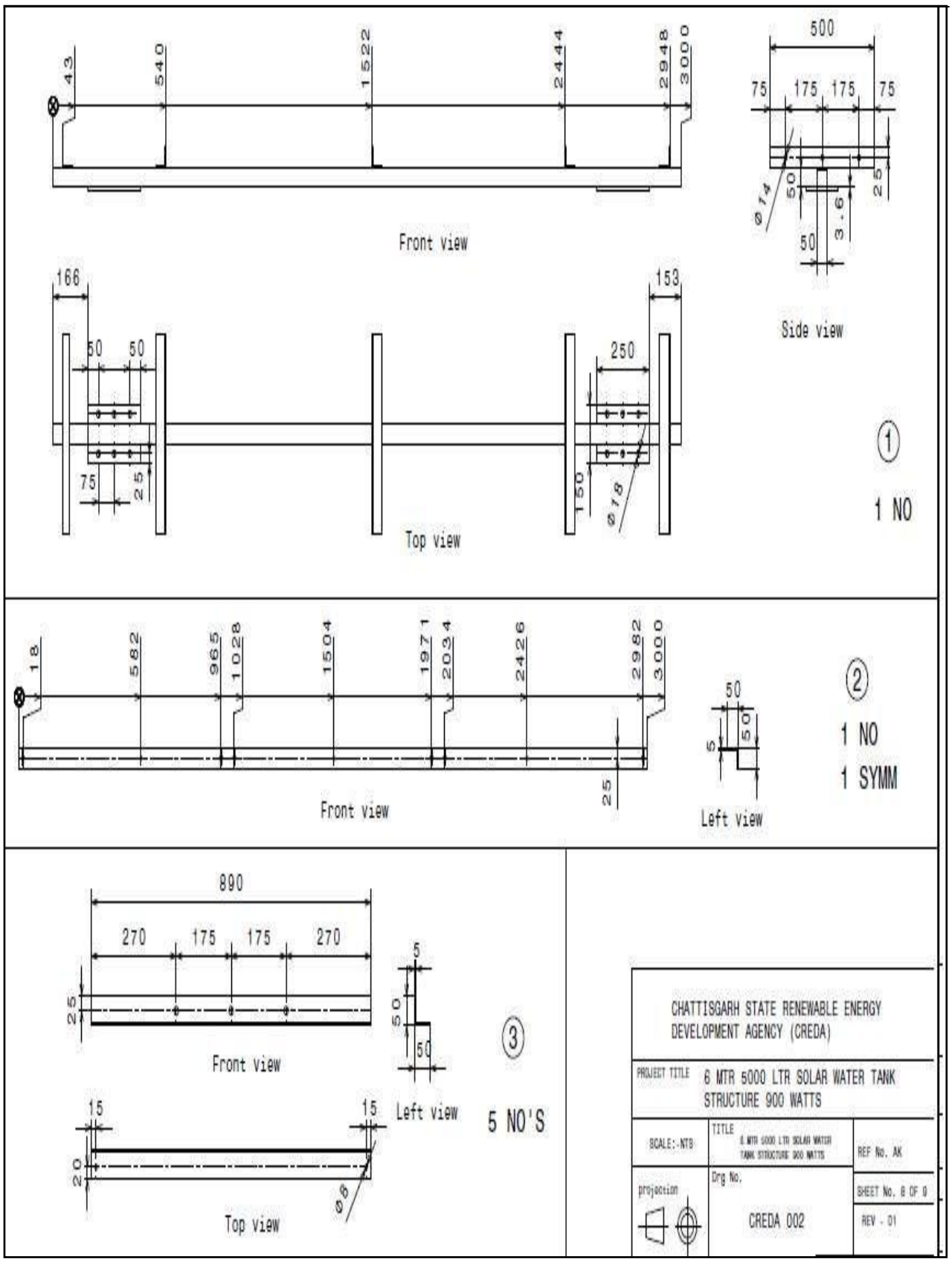
Front view
Side view
Top view
1
1 NO
Front view
Left view
2
1 NO
1 SYMM
Front view
Left view
Top view
3
5 NO'S
CHATTISGARH STATE RENEWABLE ENERGY DEVELOPMENT AGENCY (CREDA)
PROJECT TITLE
6 MTR 5000 LTR SOLAR WATER TANK STRUCTURE 900 WATTS
SCALE:-NTS
TITLE
REF No. AK
projection
Drg No.
CREDA 002
SHEET No. 8 OF 9
REV - 01

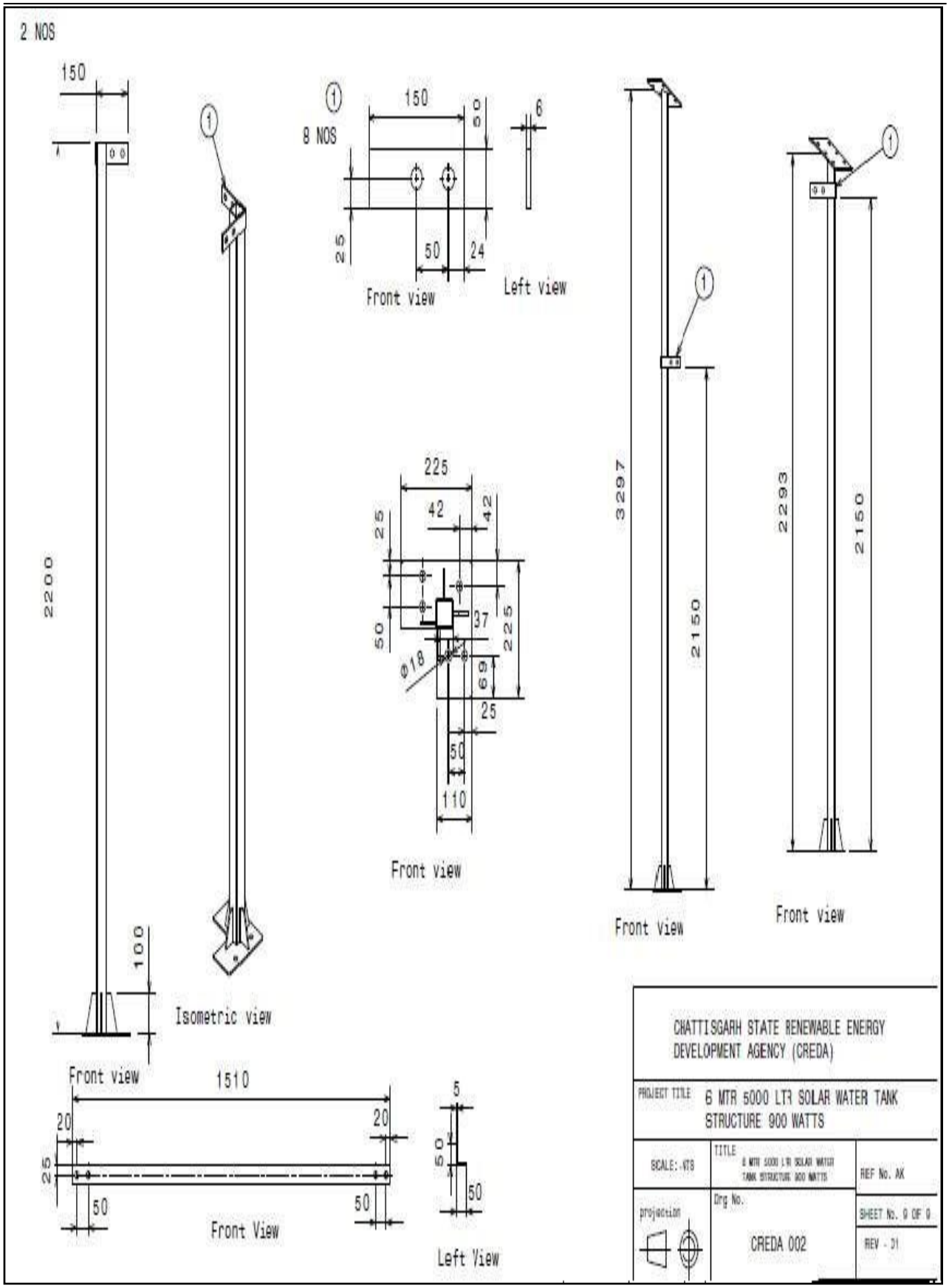
2 NOS
150
2200
100
Front view
Isometric view
8 NOS
150
60
6
25
50
24
Front view
Left view
225
42
42
25
50
37
225
Φ18
69
25
50
110
Front view
3297
2150
Front view
2293
2150
Front view
1510
20
20
25
50
50
Front View
5
50
50
Left View
CHATTISGARH STATE RENEWABLE ENERGY DEVELOPMENT AGENCY (CREDA)
PROJECT TITLE
6 MTR 5000 LTR SOLAR WATER TANK STRUCTURE 900 WATTS
SCALE:-NTS
TITLE
6 MTR 5000 LTR SOLAR WATER TANK STRUCTURE 900 WATTS
REF No. AK
projection
Drg No.
CREDA 002
SHEET No. 0 OF 0
REV - 01

Complete drawing of Stand Post with all civil works

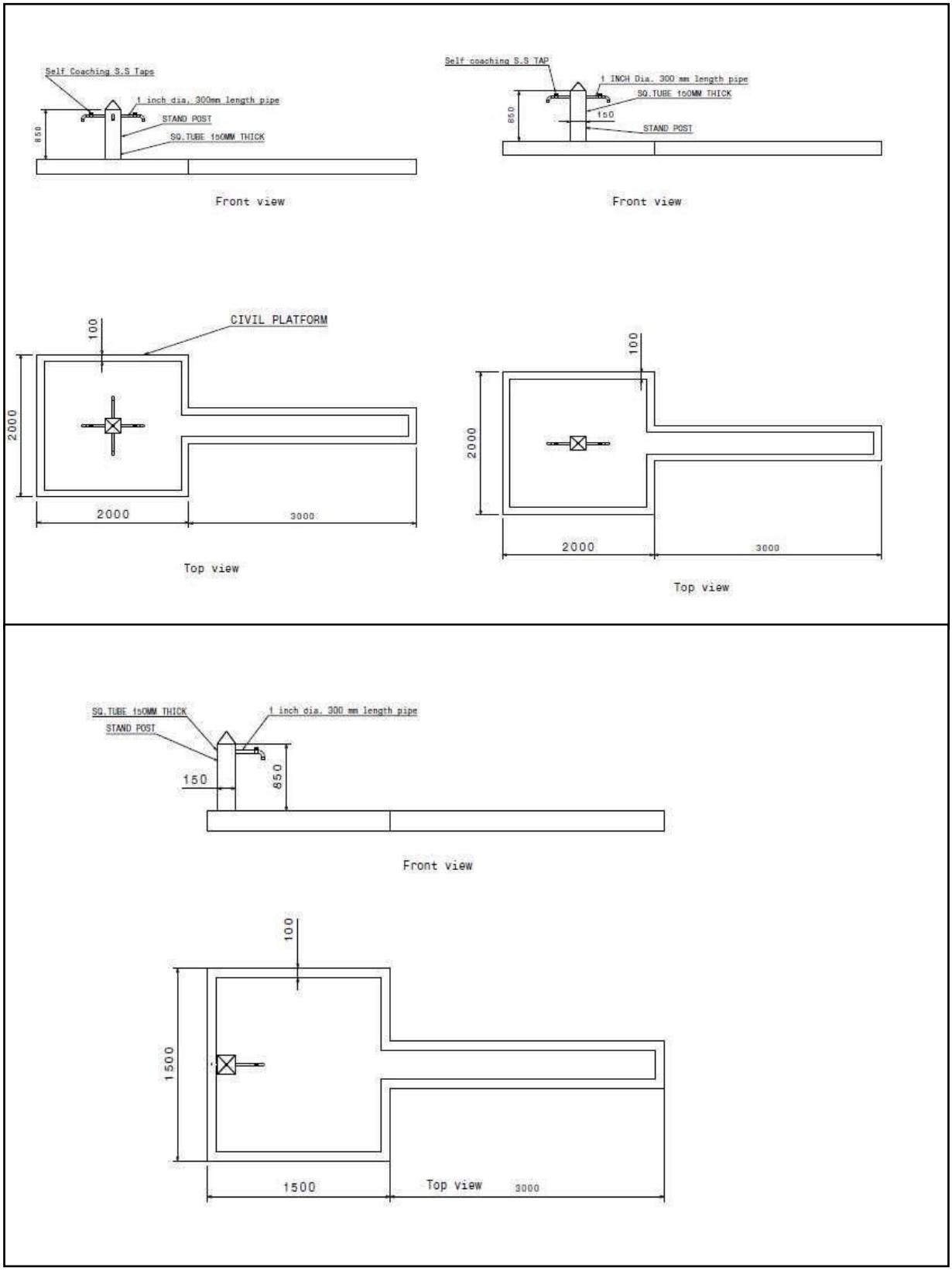

Complete drawing Special Water Chamber for installation of Solar Drinking Water pump in existing hand pump

Special Water Chamber

Schematic Drawing of Solar Energy based Dual Pump System.
Arrangement of two pumps in one Bore well

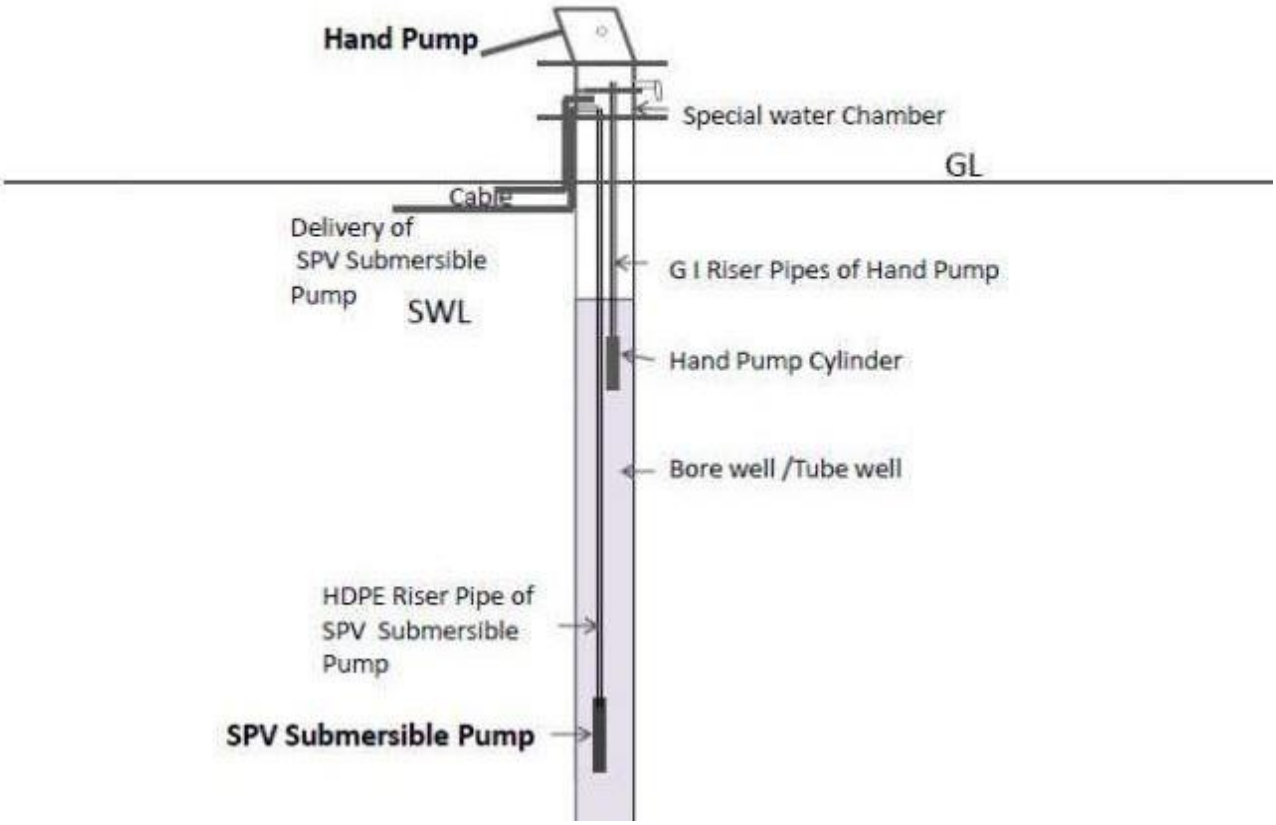

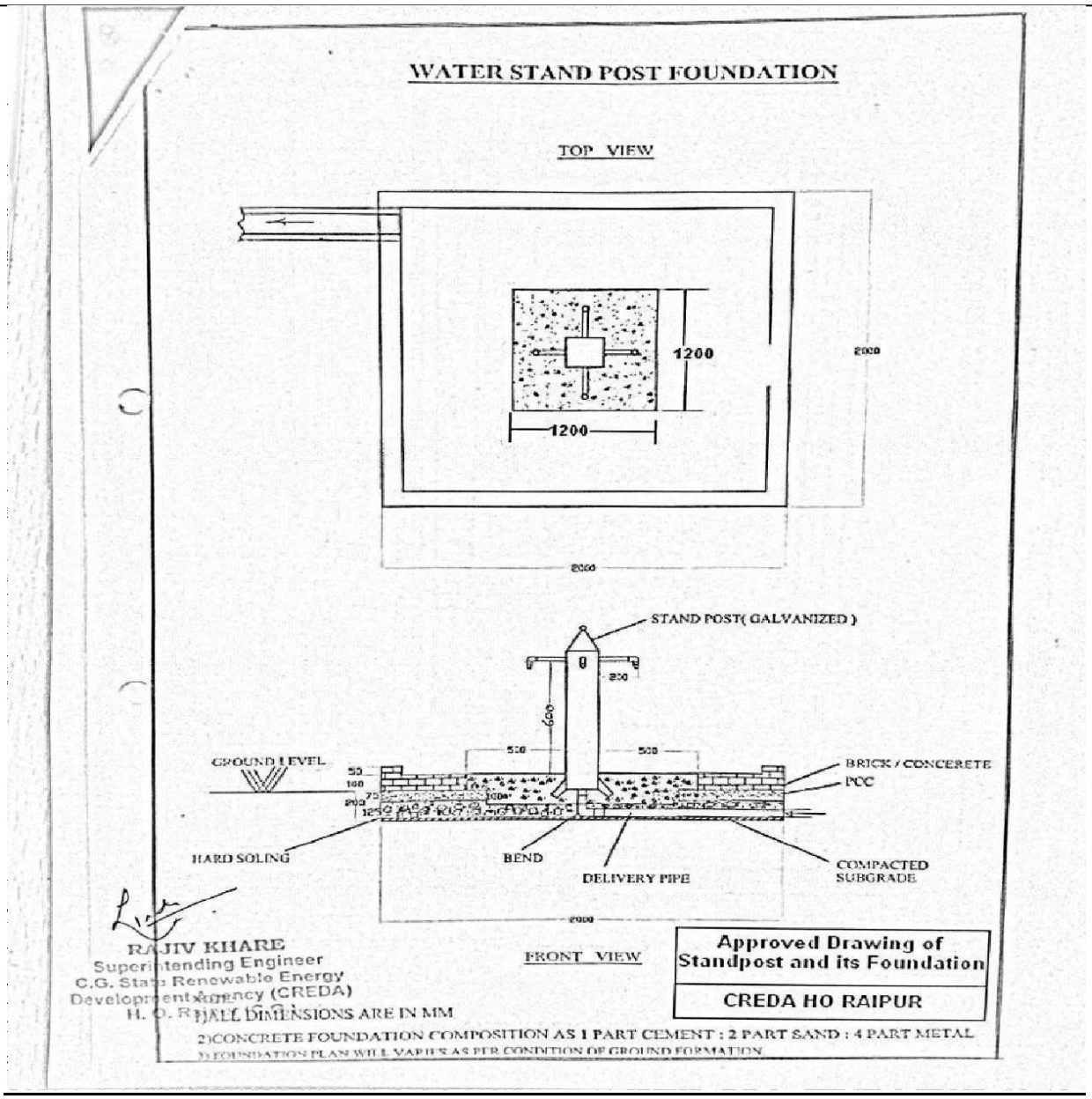
WATER STAND POST FOUNDATION
TOP VIEW
1200
1200
2000
2000
STAND POST(GALVANIZED)
200
600
500
500
GROUND LEVEL
50
100
75
200
125
BRICK / CONCERETE
PCC
HARD SOLING
BEND
DELIVERY PIPE
COMPACTED SUBGRADE
2000
FRONT VIEW
Approved Drawing of Standpost and its Foundation
CREDA HO RAIPUR
RAJIV KHARE
Superintending Engineer
C.G. State Renewable Energy
Development Agency (CREDA)
H. O. RAIPUR
1)ALL DIMENSIONS ARE IN MM
2)CONCRETE FOUNDATION COMPOSITION AS 1 PART CEMENT : 2 PART SAND : 4 PART METAL
3)FOUNDATION PLAN WILL VARIES AS PER CONDITION OF GROUND FORMATION

PART-A

Component	Activity	Description	Date	Name / Signature	*Remarks
PV Module	Cleaning	Immediately clean any bird droppings/ dark spots on module.			
	Cleaning	Clean PV modules with plain water or mild dishwashing detergent.			
	Inspection (for plants > 100 kW)	Infrared camera inspection for hot spots; bypass diode failure.			
PV Array	Inspection	Check the PV modules and rack for any damage.			
	Inspection	If any new objects, Such as vegetation growth etc., are causing shading of the array. Remove if any.			
	Vermin Removal	Remove bird nests or Vermin from array and rack area.			
Junction Boxes	Inspection	Inspect electrical boxes for corrosion, intrusion of water or vermin. Check position of switches and Breakers. Check status of all protection devices.			
Wiring	Inspection	Inspect cabling for signs of cracks, defects, lose connections, corrosion,			
		overheating, arcing, Short or open circuits and ground faults.			

Component	Activity	Description	Date	Name/ Signature	*Remarks
Inverter	Inspection	Observe instantaneous operational indicators on the face plate. Inspect Inverter housing or shelter for Any physical maintenance. Check for connection tightness.			
Inverter	Service	Clean or replace any Air filters.			
Instruments	Validation	Verify monitoring Instruments (pyranometer etc.) with standard instruments to verify their operation with intolerance limits.			
Transformer	Inspection	Inspect transformer oil level, temperature gauges, breather, silica gel, meter, connections etc.			
Plant	Monitoring	Daily Operation and Performance Monitoring.			
Spare Part	Management	Manage inventory of Spare Part.			
Log Book	Documentation	Maintain daily log Records.			
Tracker (if any)	Inspection	Inspect gears, gear Boxes, bearings, motors.			
	Service	Lubricate bearings, gear as required.			

*Provide details of any replacement of systems/components, damages, plant/inverter shutdown (planned/forced), breakdown, etc under remarks.

*Register is to be maintained by the system integrator at each location where solar power plant of all the sites mentioned in this bid. The same may be inspected by CREDA or its authorized representative at any time during 5 years of Comprehensive Maintenance contract period. The Register will have the information about the generation, Inverter downtime if any, Grid outages etc as per Part B.

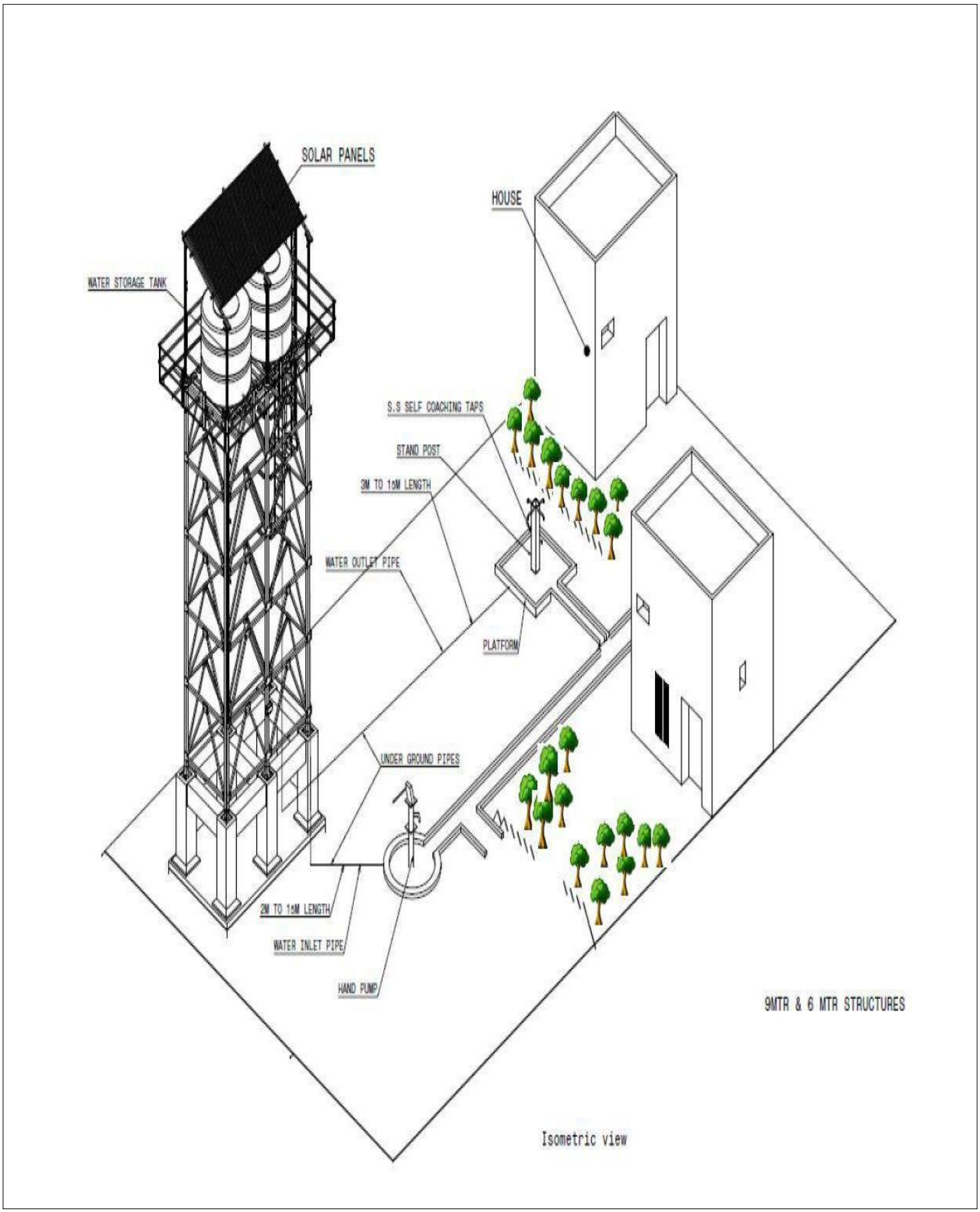
SOLAR PANELS
HOUSE
WATER STORAGE TANK
S.S SELF COACHING TAPS
STAND POST
3M TO 1.5M LENGTH
WATER OUTLET PIPE
PLATFORM
UNDER GROUND PIPES
2M TO 1.5M LENGTH
WATER INLET PIPE
HAND PUMP
9MTR & 6 MTR STRUCTURES
Isometric view

Part B (On-Grid SPV)

Month and year:
Name of the System Integrator:
Project:
Capacity:
Name of the site:

Day of the month	Solar Generation in kWh	Remarks
1		
2		
3		
4		
5		
6		
7		
8		
9		
10		
11		
12		
13		
14		
15		
16		
17		
18		
19		
20		
21		
22		
23		
24		
25		
26		
27		
28		
29		
30		

Total generation for the month in kWh:
CUF for month in %:
Cumulative generation since commissioning in kWh:
Cumulative CUF since commissioning in %:
Date:
(Name:_____)
Seal & Signature of the Authorized signatory of the System Integrator
(Name:_____)
Seal & Signature of the Authorized signatory of the Beneficiary
In case of Grid Outage/Inverter Failure mention the details in remark column.

Part C (Monthly Monitoring Report of Solar Drinking Water Pump)

Month and year:
Name of the System Integrator:
Project:
Capacity of Solar Drinking Water Pump:
Name of the site:
System Working /Not Working:

Date:

(Name:_____)
Seal & Signature of the Authorized signatory of the System Integrator

(Name:_____)
Seal & Signature of the Authorized signatory of the Beneficiary

(Name:_____)
Seal & Signature of the District Incharge, CREDA

SECTION -5
ANNEXURES, SPECIFICATIONS, FORMS

ANNEXURE – I

(EXPERIENCE CERTIFICATE ON THE OFFICIAL LETTER HEAD OF CONCERNED GOVERNMENT DEPARTMENT WITH SEAL AND SIGN BY AUTHORIZED SIGNATORY)

Ref.No.…….....……. Date……....……..

CERTIFICATE OF COMPLETION -GRID Connected SPV POWER PLANTS,and Solar Drinking Water Pump

This is to certify that **Name of Bidder, Address of Registered Office** has successfully completed the work of design supply, installation & commissioned of.....Nos. grid connected SPV Power Plants (…….Scheme) and Solar Drinking Water Pump at various locations in …..……. State, as per following details–

S.no	Capacity of Solar Power Plants	Year & Scheme	Total no. Systems	Work Order No. and Date	Commissioning /Synchronization Date	Remarks
	Total -					

The workmanship and performance of the above installed systems are found satisfactory and are in successful operation.

Seal & Sign
(Authorized Signatory)

ANNEXURE – II

FORMAT FOR THE AFFIDAVIT

(Declaration of conflict of Interest)

(Note: This affidavit should be on a non-judicial stamp paper of Rs. 100/- and shall be attested by Magistrate/Sub-Judge/ Notary Public)

I,…….(Name of the bidder authorized representative of the bidder) son/ daughter of…… resident of …… …… (full address), aforesaid solemnly affirm and state as under:

1. I hereby certify that all the information furnished with the bid submitted in response to Tender/bid no. 202960/CREDA/MSV-JC/SS/2026-27 DATE 28.10.2026 issued by Chhattisgarh State Renewable Energy Development Agency (CREDA) (authority inviting bids) for Supply, Design, Installation, and Commissioning of **Grid connected SPV Power Plant and Solar Drinking Water Pumps** of various capacities with five years CMC, Onsite warrantee at **Village-Khokhra Dist-Janjgir -**Champa in the State of Chhattisgarh.

2. I hereby certify that I have been authorized by..... (Company name) to sign on their behalf, the bid mentioned in Sr.No.1 above.*

3. Information furnished in the bidding documents is correct in all respects to the best of my knowledge and belief.

4. The near relations, as per clause 30(a) in Section - 02, in CREDA, are not in employment of the firm/company. (Note:-By the term near relatives is meant Wife, Husband, Parents and Son, Brother, Sister, Brother–in-law, Father-in-law, Mother-in-law etc.) (if working mention the name/names)
……..…….
…….

5. The name of near relative (if any) as per Clause 31(b) who retired/removed within the last two years. (If none, clearly State None)
……..…….
……..…….

6. No near relative is working as Financial Accountant in the CREDA. (if working mention the name)
……..…….
……..…….

7. No person is working in the company in any capacity, who are near relatives to any Officer in Chhattisgarh State Renewable Energy Development Agency (CREDA) (If working mention the name)
……..…….
……..…….

8. ur company/firm/ or otherwise is not under the clarification of ineligibility for corrupt and fraudulent practices by the Central Government, the State Government or any public undertaking, autonomous body, authority by whatever name called under the Central or the State Government as mention in clause 1(f) of tender document.

9. I hereby authorize the CREDA Officials to get all the documents verified from appropriate sources (s).

Deponent

Place: ……..
Date: ……

* Not applicable if the bidder is an individual and is signing the bid on his own behalf.

Verification

I……. S/o……do here by affirm that contents stated in Para 1 to 9 above and contents submitted in technical & financial bid are true to the best or my knowledge and believe and are based on my/our record.

Verified that this date of …… at (Place)…….

Deponent

ANNEXURE – III

e-Price Bid

(e-bidding as per Specifications & Scope of Work of E-BID DOCUMENT No. **202960/CREDA/MSV-JC/SS/2026-27 DATE 28.10.2026**)

Rates for the Design, Supply, Installation & Commissioning of Grid connected SPV Power Plant and Solar Drinking Water Pumps with five years Comprehensive Maintenance, Onsite warrantee including training at **Village-Khokhra District Janjgir-Champa** of Chhattisgarh State as per scope of work, technical requirement, specifications & terms and conditions etc of the tender.

(Rates should be quoted in INR, excluding GST)

ITEM. No.	Item Details	units	Rate (Excl. GST)
1	2	3	4
1	Supply, Installation & Commissioning of Grid Connected Roof top SPVPP (Cumulative Cap.143kWp*15 Nos.) with five years Comprehensive Maintenance Contract (CMC) including training to villagers/beneficiary for proper upkeep and maintenance and Sign board		
1.1	60 kWp	01	
1.2	15 kWp	01	
1.3	12 kWp	01	
1.4	10 kWp	01	
1.5	07 kWp	02	
1.6	05 kWp	03	
1.7	04 kWp	01	
1.8	03 kWp	03	
1.9	02 kWp	02	
2	Supply of installation and commissioning of Solar Drinking Water pump system including Civil work (Structure) with Solar Module, Controller, MTMS Structure, L.A, Earthing-02 Numbers., Rope wire, Cable, PVC & GI Pipes and other required BOS with five years onsite complete system warrantee, System, testing and 5 Year Comprehensive Maintenance Contract (CMC) including training to villagers/beneficiary for proper upkeep and maintenance and Sign board		
2.1	SPV Drinking Water Pump- min. 900Wp / 1.0 HP DC Submersible with 06 Meters staging and 5000 Liters Storage Tank	01	
Total Project Cost (Excl. GST)			

Certified that rate quoted above are as per the requirement, specification and terms & condition mentioned in the bid document.

Above rates are FOR above sites in the State of Chhattisgarh inclusive of roadworthy packing, loading, unloading, all types of incidental expenses, insurance, duties and any other job required to properly execute the work with 5 years warrantee, as mentioned in the Bid document. (Above rates applicable for Solar Power Plant system as per MNRE and CREDA Specifications stated in Bid document. The GST payable on the bill produced for payment to CREDA shall be paid in addition to above quoted price as per rate of GST applicable at the time of billing.

As per GST notification no. 09/2025-Central Tax (Rate) dated 17.09.2025. GST rate will be applicable under composite supply and installation basis. Rate of GST on supply of goods (70% of gross consideration treated as supply of goods) 5% GST and balance portion (30% of gross consideration treated as taxable installation services) 18% GST will be paid extra. No other cost will be claimed other than above quotes price & the applicable GST.

Bidders shall quote the combined rate (Supply, Installation & Commissioning + 05 Years CMC) in the online Price Bid and submit the detailed bifurcation/breakup of the above components in a sealed envelope superscribed "Price Bid bifurcation/breakup" along with the hard copy of the bid documents, compulsorily.

(No other cost will be claimed other than above quotes price & the applicable GST)
Note:-Partial bidding is not allowed.

Signature of the Authorized Signatory:.....

Seal of Company: .....

Date: .....

ANNEXURE – IV

CREDA Logo to be pasted on Solar System

ANNEXURE – V

DRAFT AGREEMENT

CONTRACT AGREEMENT BETWEEN Chief Engineer Chhattisgarh State Renewable Energy Development Agency (**CREDA**) Raipur AND **M/s……..…** Represented by**……..……** THIS CONTRACT AGREEMENT against **E-BID DOCUMENT No. 202960/CREDA/MSV-JC/SS/2026-27 DATE 28.10.2026**
(also referred to as "Service Contract") is made on the day of ……2026.

BETWEEN

1. Chief Engineer Chhattisgarh State Renewable Energy Development Agency (**CREDA**) Raipur a society incorporated under the laws Society Registration Act 1973, (1973 , Sr. No. 44) (with amendment from time to time) and having its Registered Office at VIP Road Near Energy Education Park, Village-Fundhar, Raipur and (hereinafter called "The Employer" and also referred to as "CREDA")

And

2. **……**Represented by **……**a company incorporated under the laws of Companies Act 1956/2013/ Partnership firm/ Proprietorship firm **(**as applicable**,** with amendment from time to time) and having its Principal place of business at **……**and Registered Office at**……**hereinafter called "The Contractor" and also referred to as "……..**"**

Whereas the contractor has offered to enter into contract with the said CREDA request for proposal (rfp) for design, supply, installation and commissioning of Grid-connected Rooftop Solar Photovoltaic Power Plant (Cumulative cap. 143kwp/15nos.) and SPV drinking water pump (cap. minimum 900wp /1.0 hp dc submersible with 06 meters staging and 5000 liters storage tank*01 nos.) with 5 years onsite warrantee and comprehensive maintenance of different capacities at village-Khokhra District Janjgir-Champa of Chhattisgarh State under "Model Solar Village" component of PM Surya Ghar Muft Bijli Yojana. Vide **BID DOCUMENT No. 202960/CREDA/MSV-JC/SS/2026-27 DATE 28.10.2026** on the terms and conditions herein contained and the rates approved by the CREDA (Letter No. …….. dated……. annexed here to) have been duly accepted and whereas the necessary security deposit shall be furnished in accordance with the provisions of the Bid document and whereas no interest will be claimed on the security deposits.

Now these presents witness and it is hereby agreed and declared by and between parties to these presents as follows -

1) The Contractor shall during the period of this contract, that is to say from……To……or completion thereof, until this Contract shall be determined by such notice as is hereinafter mentioned, safely carryout, by means of labour employed at his own expenses and by means of tools, implements and equipment etc. to be supplied by him to his labour at his own expenses, for installation of " Grid connected SPV Power Plant and Solar Drinking Water Pumps" as described in Bid documents. (Annexed to the agreement).

2) The NIT (Notice Inviting Bid), Corrigendum to NIT, Notices, Bid documents (Qualifying, Technical and Financial), approved rates annexed hereto and such other additional particulars, undertaking, instructions, general conditions of contract, Scope of work, Technical specifications of Grid connected SPV Power Plant and Solar Drinking Water Pumps and Annexure therein, engineering documents, detailed specifications of BOS & drawings, so far they relate to the Bid DOCUMENT No. **202960/CREDA/MSV-JC/SS/2026-27 DATE 28.10.2026** as may be found requisite to be given during execution of the work shall be deemed and taken to be an integral part of the contract and shall also be deemed to be included in the expression "The Agreement or "The Contract "wherever here in used.

3) The contractor shall also supply the requisite number of workmen with means &materials as well as tools, appliances, machines, implements, vehicles for transportation, cartage etc. required for the proper execution of work within the time prescribed in the work orders and /or as per the Bid conditions.

4) The Engineer in Charge or his authorized representative (s) shall be entitled at all reasonable times to inspect and supervise and test during installation and commissioning. Such inspection will not relieve

the eligible SI from their obligations under this contract.

5) Material can be inspected before dispatch or in transit by the authorized representatives of CREDA at the factory at the cost of the eligible SI, if desired by CREDA. CREDA reserves right to inspect the material at Godowns / Temporary Stores before dispatch and also at works sites. Additionally, CREDA reserves the right to inspect the manufacturing unit in cases where the bidder and the manufacturer of the material are different entities. Furthermore, CREDA may also blacklist or debar the manufacturer in case of any manufacturing defect.

6) CREDA shall deduct TDS for Income Tax, applicable cess on Civil Work etc. under various acts and deposited with the appropriate authority. Costs and taxes before execution of agreement with CREDA so as to ensure tax deposition as per Government Rules accordingly.

7) ELIGIBLE SYSTEM INTEGRATOR'S LIABILITY IN CASE OF DEFAULT-

CREDA may by written notice of default to the eligible SI, terminate the contract in circumstances detailed hereunder -

a. If in the opinion of the CREDA, the eligible SI fails to complete the work within the time specified in the Work Order or within the period for which extension has been granted by CREDA to the eligible SI.

b. If in the opinion of CREDA, the eligible SI fails to comply with any of the provisions of this contract.

c. In the event of CREDA terminating the contract in whole or in part as provided in paragraph (a) above, CREDA reserves the right to engage another eligible SI or agency upon such terms and in such a manner as it may deem appropriate and the eligible SI shall be liable to CREDA for any additional costs or any losses caused to CREDA as may be required for the completion of erection of the Grid connected SPV Power Plant and Solar Drinking Water Pumps and or for penalty as defined under this Bid document until such reasonable time as may be required for the final completion of the work. CREDA may debar such a defaulter SI for up to three years from taking participation in taking part in all activities of CREDA.

d. In the event CREDA does not terminate the contract as provided in paragraph (a) the eligible SI shall continue performance of the contract, in which case he shall be liable to CREDA for penalty for delay as set out in clause 16 until the work is completed.

8) FORCE MAJEURE-

The eligible SI shall not be liable for any penalty for delay or for failure to perform the contract for reasons of FORCE MAJEURE such as of God, acts of public, enemy, LWE problems, acts of government, cyclone, fires, floods, epidemics, quarantine restrictions, strikes, freight embargoes provided that if SI shall submit delay notice with appropriate cause of delay to the CREDA in writing within **15 days** of force majeure. CREDA shall verify the facts and may grant such extension as facts justify. Delay in supply of any accessories of Solar power plants etc. by the related vendors, to whom the Bidder has placed order, shall also not be treated as force majeure.

9) REJECTION OF WORKS -

In the event of any of the material supplied/work done by the eligible SI is found defective in material or workman ship or otherwise not in conformity with the requirements of this contract specifications, CREDA shall either reject the material and/or work and advise the eligible SI to rectify the same. **CREDA may impose penalty for such rejection up to the 200% cost of the entire system. Habitual/repeated offenders shall be black listed/debarred to participate in the any Bid/ Activity of CREDA till further orders.** The eligible SI on receipt of such notices shall rectify or replace the defective material and rectify the work free of cost. If the eligible SI fails to do so CREDA may-

a. At its option replace or rectify such defective materials and/or work and recover the extra cost so involved from the eligible SI plus **15%** service charges of the cost of such rectification, from the eligible SI and/ or terminate the contract for balance work/ supplies with enforcement of penalty **as stated above**.

b. Defective materials/workmanship will not be accepted under any conditions and shall be rejected outright without compensation. The eligible SI shall be liable for any loss/damage sustained by CREDA due to defective work **with enforcement of penalty as stated above**.

10) EXTENSION OF THE TIME-

If the completion of installation is delayed due to any reason beyond the control of the eligible SI, the

eligible SI shall without delay give notice to the CREDA in writing of his claim for an extension of time. CREDA on receipt of such notice may or may not agree to extend the contract/delivery date of the Grid connected SPV Power Plant and Solar Drinking Water Pumps as may be reasonable but without prejudice to other terms and conditions of the contract.
Chief Executive Officer, CREDA has full right for time extension.

11) PENALTY FOR DELAY IN COMPLETION OF CONTRACT-

If the eligible SI fails to complete the assigned work within the schedule time specified in the Work Order or any extension granted there to, **CREDA will recover from the SI as penalty of 0.5 percent per week or two percent (2%) per month of the system price excluding GST for every delayed system**. For this purpose, the date of taking over shall be reckoned as the date of completion. The total penalty shall not exceed 5% (five percent) of the cost. The eligible SI shall not be liable for any penalty for delay or for failure to perform the contract for reasons of force majeure. Additionally, CREDA reserves the right to **black list or debar such System integrator to participate in any Bids/Activity of CREDA up to 03 (three) years** due to delay in work. Review of the progress of installation of Grid connected SPV Power Plant and Solar Drinking Water Pumps allocated to SIs shall be done time to time by CREDA and if the progress of installation is found unsatisfactory, the allocation of entire remaining uninstalled system or their part of can be re-allocated to other SI as per discretion of CREDA.

12) PENALTY DUE FROM THE ELIGIBLE SI-

All costs of damages and delays for which the eligible SI is liable to the CREDA will be deducted from any money due to the eligible SI including the security deposit of any project under CREDA. Additionally, CREDA reserves the right to black list or debar such a bidder from participating in future projects or activities of CREDA up to 03 (three) years.

13) RESPONSIBILITY OF ELIGIBLE SI'S -

Notwithstanding anything mentioned in the specifications of subsequent approval or acceptance of the Grid connected SPV Power Plant and Solar Drinking Water Pumps by CREDA, if any, the ultimate responsibility for satisfactory performance of the entrusted work shall rest with the eligible SI. If in any case the eligible SI does not complete the work as per the Work Orders issued to them then CREDA may take over the task & complete the project at the risk and cost of eligible SI.

14) RESPONSIBILITY TO RECTIFY THE LOSS AND DAMAGE-

If any loss or damage occurs to the work or any part thereof or materials/plant/equipment's for incorporation therein the period for which the eligible SI is responsible for the cause thereof or from any cause whatsoever, the eligible SI shall at his own cost rectify/replace such loss or damage, so that the permanent work confirms in every respect with the provision of the contract to the satisfaction of the Engineer. The eligible SI shall also be liable for any loss or damage to the work/equipment's occasioned by him in course of any operation carried out to him during performing the contract.

15) RESPONSIBILITY TOWARDS THE WORKMAN OR OUT SIDERS-

a. The eligible SI shall have to take insurance coverage from any authorized Insurance Company against Workmen compensation due under Workmen Compensation Act and submit copy of the insurance document before issuance of Work Order.

b. The eligible SI shall ensure all safety measures during execution and repairs of the work. CREDA, will, in no case be responsible for any accident fatal or non-fatal, caused to any workman or outsider in course of transport or execution or repairs of work.

c. All the expenditure including treatment or compensation will be entirely borne by the eligible SIs. The eligible SI shall also be responsible for any claims of the workers including PF, Gratuity, ESI & other legal obligations.

d. CREDA shall have all rights to deduct such claims of payments from SI in case of complaints of such violations.

16) Contractor shall provide 05 years warranty in installed Grid connected SPV Power Plant and Solar Drinking Water Pumps from the date of commissioning as per the terms &

conditions prescribed in the ***BID DOCUMENT No.*** **202960/CREDA/MSV-JC/SS/2026-27 DATE 28.10.2026.**

17) DECLARATION OF CONFLICT OF INTEREST -

a. Any regular employee working or worked on basis of contract or through placement agency cannot work directly or indirectly in any scheme of CREDA. If such a person is found working with any SI or through sublet then, such SI shall be blacklisted for three years.

b. The bidder shall not be permitted to Bid for the work if the section of HO CREDA (responsible for implementation of work) in which his near relative is posted. Furthermore, the successful bidder shall not be given work in the district in which his near relative is posted. The bidder shall also intimate the names of his near relatives working in CREDA. Bidder shall also intimate the name of persons who are working with him in any capacity and who are near relatives to any employee in CREDA. Any breach of this condition by SI would render himself liable to be blacklisted for three years and removed from approved list of SIs in CREDA.
Note:- By the term near relatives are meant Wife, Husband, Parents and son, Brother, Sister, Brother-in-law, Father-in-law, and Mother-in-law etc.

c. Bidder must produce an affidavit (**Annexure – III**) stating the names of retired/removed employee of CREDA (if any) in his employment who retired /removed within last two years, if in case there is no such person in his employment, his affidavit should clearly state this fact. This affidavit is mandatory, if it is not produced along with the bid, the bid shall be rejected.

18) The contractor shall arrange insurance coverage for the materials and Grid connected SPV Power Plant and Solar Drinking Water Pumps at his/beneficiary's custody for the work under execution and successful commissioning and subsequent handover to the beneficiary. The contractor shall take up insurance or such other measures for the manpower so as to cover the claim for damage arising under workmen's compensation Act and other applicable State/ Central laws. CREDA shall not bear any responsibility on this account.

19) Contractor shall arrange for insurance coverage for Grid connected SPV Power Plant and Solar Drinking Water Pumps during CMC period i.e. for 05 years from the date of installation. Insurance should cover for damage and theft. In case of such incidence, SI must replace the lost/damaged part within 7days.

20) The contractor shall abide by the terms and conditions, rules, guidelines, construction practices, safety precautions etc. stipulated in the Bid document including any correspondence between the contractor and the **CREDA** having bearing on execution of work and payments of work to be done under the contract.

21) The contractor shall be responsible to follow all the laws including Workmen Compensation Act and all other laws in force & shall be responsible for all the obligations towards labour including EPF, ESI, etc.

22) All the taxes deductible at source as per Acts in vogue shall be recovered by **CREDA** and deposited with the appropriate authorities.

23) Contractor agrees to abide by any decision/instruction passed by the appropriate authority under Anti-profiteering rules notified by the state/central government under GST act.

24) Any dispute arising out of the contract shall be subject to the jurisdiction of Hon'ble High Court of Chhattisgarh.

"Herewith everything and anything contained in Bid document no. 202960/CREDA/MSV-JC/SS/2026-27 DATE 28.10.2026 is part of this agreement which has been dully signed by both bidder and authorized signatory of CREDA".

In witness whereof the parties present today has hereby entered into agreement.

Signed & sealed on behalf of the above

Name of contractor

Name:
Designation:

Signed on behalf of CREDA

Name:
Designation:

Witness:

1. Name:-……
Address:……..

2. Name:……
Address:-……

SCHEDULE - I

PART 'A': GENERAL INFORMATION

(Strike off whichever is not applicable. Separate sheets should be used, wherever necessary)

01. Name & Address of the Bidder :

02. Name & Address of the firm/Company etc. :

a) Registered office :

b) Factory/works address :

c) Fax Nos. :

d) Telephone /Mobile Nos. :

e) Email id :

03. Confirm whether Bidder is Manufacturer : Yes/No

04. Only manufacturer to give following particulars

a) Address of factory :

b) Year of starting manufacture :

c) Whether same/similar materials :
Manufactured earlier (if yes, give reference)

d) Yearly/monthly production capacity:

e) Maximum yearly production Achieved so far:

05. Whether the firm is SSI Unit of Chhattisgarh State : Yes/No

a) If yes, write registration No. :

b) Whether documentary evidence :
Regarding registration enclosed

c) Items for registration :

d) Period of registration :

e) Whether latest copy Competency/ Certificate furnished: Yes/No

06. Whether the firm is 100% owned by

a) State Government : Yes/No

b) Central Government : Yes/No

If yes, Notification/certificate issued from : Yes/No
The competent authority to this effect is enclosed

a) Whether the bidder is old participant with CREDA: Yes/No

b) If yes, whether documentary Evidence is enclosed. : Yes/No

07. Any other information that bidder may like to give in order to : Yes/No
Highlight his bid If yes, give details

PLACE :-

DATE: - **SIGNATURE OF BIDDER**

NAME :-

DESIGNATION/STATUS FIRM/COMPANY SEAL

SCHEDULE - II

PART 'B': COMMERCIAL INFORMATION

(Strike off, whichever is not applicable. Separate sheets should be used. Wherever necessary)

01. i) Earnest Money Details : Bank draft/Bankers cheque payable to "CREDA", Raipur
ii) Amount of E.M.D. & full details : .....

02. Whether the offer is valid for 6months : Yes/No

from the date of opening of commercial/technical bid.

03. Rate of Sales Tax on the date of bid : (exclusive in the rate quoted)

04. **DISCOUNT**:

a) Whether any rebate/discount is offered. : Yes/No

b) If yes, whether the rebate is unconditional/conditional : Yes/No
Rate/amount of rebate/discount

c) If conditional State condition : Yes/No

05. **PAYMENT TERMS**:
Whether CREDA's terms of payment is acceptable to Bidder : Yes/No

06. **COMPLETION PERIOD OFWORK**:
Whether Bidder is agreeing for completion period of work as Specified in the Bid : Yes/No

07. **PENALTY CLAUSE**:
Whether agreeable to CREDA's Penalty Clause : Yes/No

08. Whether agreeable to CREDA's clause of warrantee period : Yes/No

09. **SECURITY DEPOSIT**:
Whether Security Deposit clause is understood : Yes/No

10. Indicate State, Central Sales Tax Registration Number State : Yes/No
Central: (Please Note that in case of non-registration with Commercial Tax, Department Purchase Tax as admissible shall be deducted by the Purchaser from the Bills of the supplier)

11. Please mention whether rates offered are applicable for : Yes/No

part quantities.

PLACE :-

DATE: -

SIGNATURE OF BIDDER
NAME :-
DESIGNATION/STATUS FIRM/COMPANY SEAL

SCHEDULE -III

PART 'C': TECHNICAL INFORMATION

(Strike off whichever is not applicable. Separate sheets should be used. Wherever necessary)

01. Whether material offered is exactly as per technical specification : Yes/No

02. Whether the copies of completion certificate received during last 3 years : Yes/No from other State Nodal Agency or from other Organization for Solar SPVPP Systems (if yes, give details) enclosed.

03. Whether pamphlets/technical details literatures along with drawing etc. : Yes/No Furnished with the offer (if yes, give details)

04. Whether the Bidder agrees to furnish material test certificates in : Yes/No respect of chemical composition and physical properties from Govt./ Govt. approved lab with each batch of supplies.

05. Whether the Bidder has furnished details of manufacturing equipment : Yes/No and short history of plant (if yes, give details)

06. Whether details of manufacturing process furnished with offer. : Yes/No (if yes, give details)

07. Whether all testing facilities are available.: Yes/No If so, give details and in case of non-availability of facilities indicate approved lab available in surrounding areas where tests are proposed to be conducted.

PLACE :-

DATE: -

SIGNATURE OF BIDDER

NAME :-

DESIGNATION/STATUS FIRM/COMPANY SEAL

SCHEDULE -IV

TECHNICAL DEVIATIONS

From,
Bidder Name & Address -

To,
The CE,
CREDA, HO,
Raipur
Sub – Technical Deviations.
Dear Sir,

01. The technical deviations & variations to the specifications stipulated in the Bid, for the item quoted are as under -

Sl. No.	Condition	Clause No. of Tender Document	Page No. of Tender Document	Statement of deviations and variations

02. Except aforesaid deviations, the entire order, if placed, on us shall be executed in accordance with your specifications and other conditions. Variation/deviations etc. if found, elsewhere in our offer should not be given any considerations while finalizing the Bid.

PLACE:
DATE :

SIGNATURE OF BIDDER
NAME IN FULL DESIGNATION/STATUS
FIRM/COMPANY SEAL

NOTE - Continuation sheet of like size & format may be used as per bidder's requirements and shall be annexed to this schedule.

SITE CLEARANCE CERTIFICATE FOR Grid Connected System

FORM – A

1. Name of Site :- …….
2. Name of Beneficiary :- …….
3. Capacity in Watt & Type of Solar Power plant :- …….
4. Layout of site indicating location of SPV modules/Collector & Control Room :- …….
5. Size of Control Room available :- …….
6. Available shadow free space selected for Installation of SPV modules :- …….m^2
7. Load details and comment on connectivity with grid and load :- …….
8. Name of beneficiary's contact person & his mobile no. who shall be responsible for installation & Commissioning of Solar Power Plant :- …….
9. Electricity bill of site of current month is enclosed:-…….
10. Availability of electrical panel for connectivity of Grid connected Solar Power Plant :-…….

It is hereby certified that site is technically clear for installation.

(Signature & Seal) Beneficiary Department	(Signature & Seal) Surveyor/Representative of Company	(Signature & Seal) Assistant Engineer/ District In charge CREDA, District Office

FORM – B

SITE CLEARANCE CERTIFICATE (Solar Drinking Water Pump)

Date :-

Name of Village _____ Name of Block _____ Name of District _____

Location of Borewell _____
(eg. Distance from house _____
owner, temple or any _____

Type of Existing Pump Hand Pump4 Submersible Pump 6 ☐ None
Diameter of Borewell ☐ inch ☐ inch ☐ other _____

Depth of Borewell as per record (eg. 30 mtrs.) _____ meters

Existing Depth of Borewell (eg. 30 mtrs.) _____ meters

Length of Casing Pipe (eg. 20 mtrs.) _____ meters

Yield of Borewell (Min, 2,500 lit/hr) _____ litres/hour

Static Water Level (eg. 10 mtrs.) _____ meters below ground level

Pumping Water Level (Max. 40mrts. Where water Level is stable while pumping) _____ meters below ground level

Material Delivery Contact Material Delivery Place (location to store)

(person to approach when delivering equipment & material) *Name* ----------, Mobile ----------

……. & its contractors are allowed to work for the installation of Solar Hand Pump System.

Date :- _____

FORM-C

Site Selection Criteria

Name of Village _____ Name of Block _____ Name of District _____

- Yield of the bore well should not be less than 2,500 litres/ hour
- Pumping Water Level should not be more than 40 meters.
- Identified bore well should not have any obstacles such as tree roots, stones, etc.
- Identified bore well diameter should not be less than 100mm. or 4 inches.
- Water from the identified bore well should not be muddy at the depth at which the pump is expectedto be installed.
- Tank tower location should not have any tree in the 15 meter periphery.
- The tank tower location should not have any transmission lines in the vicinity.
- Building structures more than 3 meters tall should not be near the tank tower location so that noshadow of any tree or house falls on the tank tower throughout the day.
- Distance between the stand post and tank tower should not be more than 15 meters and the distancebetween bore well and tank tower should not be more than 15 meters.
- The stand post location should have natural slope for drainage of accumulated water.
-

Assistant Engineer/District Incharge CREDA, District Office	Beneficiary Department representative	Surveyor/Representative of Company

FORM – C1

Plan of Site (for GCRT)

Village/Site:-……

Block:-……

District:- …… Date:-……

PLAN FOR IDENTFIED SITE

Note :- All distance mentioned should be in meters directions of mention.

(Signature & Seal)
Beneficiary Department

(Signature & Seal)
Surveyor/Representative of Company

(Signature & Seal)
Assistant Engineer/
District In charge
CREDA, District Office

Plan of Site (for Solar Drinking Water Pump)

Form-C2

Block _____

District_____**Solar Pump** Date : _____

PLAN FOR IDENTIFIED SITE (BOREWELL)

example

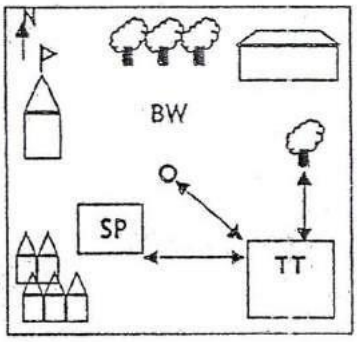

LEGEND

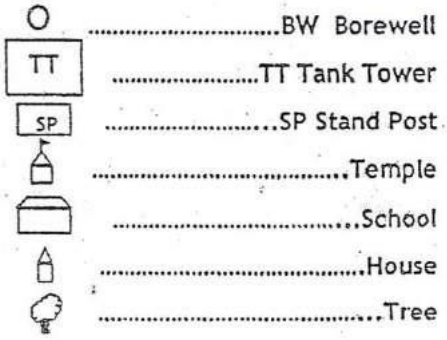

Please Note : All the distances mentioned should be in meters, consider DIRECTION while making the map.

Assistant Engineer/District Incharge of CREDA, District Office **Beneficiary Department** **Surveyor/Representative representative Company**

END